Features

- 18.5” PCap Touchscreen
- Intel 11th Gen Tigerlake CPU
- Modular Design with Removable Box PC
- Customizable and Expandable
- Slim, Future proof design

Technical Specifications

Primary Components

Processor Family	Intel Core I series 11th Generation Tiger Lake
Processor Model	Core i3-1115G4E
Memory Type	1x DDR4 SO-DIMM
Memory Support	4GB, 8GB, 16GB
Storage Type	1x M.2 slot for SSD
Storage Support	M.2: 128GB-1TB

Display

Screen Size	18.5"
Resolution	Optional 1920 x 1080, 1366 x 768
Screen Ratio	16:9
Brightness	250 nits

Touch Screen

Touch Screen	Projected Capacitive (Multi-touch)

External I/O Ports

USB	1x USB 2.0 type C (data only), 1x USB 3.0 Type-C (Power/Video/Data), 2x USB 2.0, 2x USB 3.0
Serial / Com	2x COM
Serial Protocol Detail	x2 RS-232 DB-9
Ethernet / LAN	1x RJ45 GbE LAN
Other Ports	1x RJ11; Custom connector for External Monitor
Power Input Port	4-Pole DIN (latching)

Power

Input Voltage Range	19V DC
Standard Power Adapter	120W AC/DC Adapter

Operating Systems

Windows	Windows 10 IoT, Windows 10 Pro, Windows 11
Linux	Linux (Contact your sales rep for more information)

Compatibility

Security Hardware	TPM 2.0

Expansion Slots

Internal M.2	1x M.2 2230 Key E (for WiFi expansion option)
Expansion Module support	4 USB based expansion areas on Bezel

Multimedia

Speakers	1x 3W Speaker
Camera	Optional Webcam

Thermal & Environmental

Operating Temperature	0°C - 35°C (32°F – 95°F)
Storage Temperature	-20°C - 60°C (-4°F – 140°F)
Cooling Solution	Passive – Fanless
Humidity Range	20% – 85% Non-condensing

Enclosure

Material	Plastic
IP Rating	IP54 Front Bezel
Color	Black
Led Indicator Light	Power
Control Buttons	Power Button
Mounting Options	VESA 100 Mount, VESA 75 Mount

Peripherals & Wireless Connectivity

WiFi	Optional 802.11 a/b/g/n/ac
Bluetooth	Optional Bluetooth 5.1
Barcode Scanner	Optional 1D/2D Barcode Scanner
RFID	Optional RFID
Peripheral Other	3-Track MSR; Fingerprint Reader; Contact Teguar is you have a customized external Module request

Weight / Dimensions

Weight	4.4 kg (9.7 lbs)
Dimensions	451 x 273 x 51 mm (17.8 x 10.7 x 2.0 in)

Certification

Certifications	CE, FCC Class A, LVD

Warranty

Warranty	Up to 5 Years

I/O Diagram Images

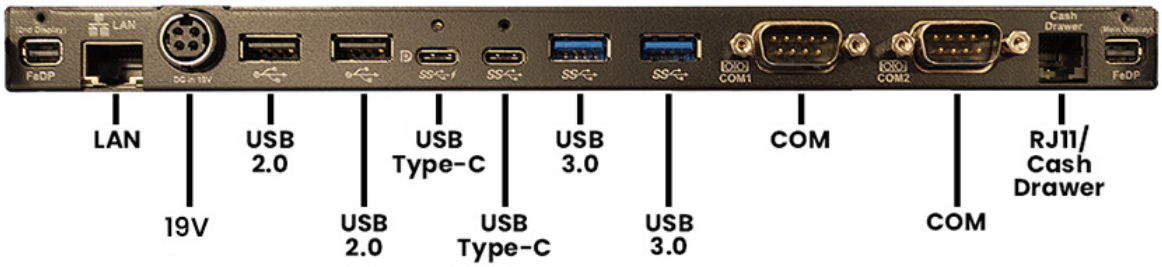

Tech Diagram Images

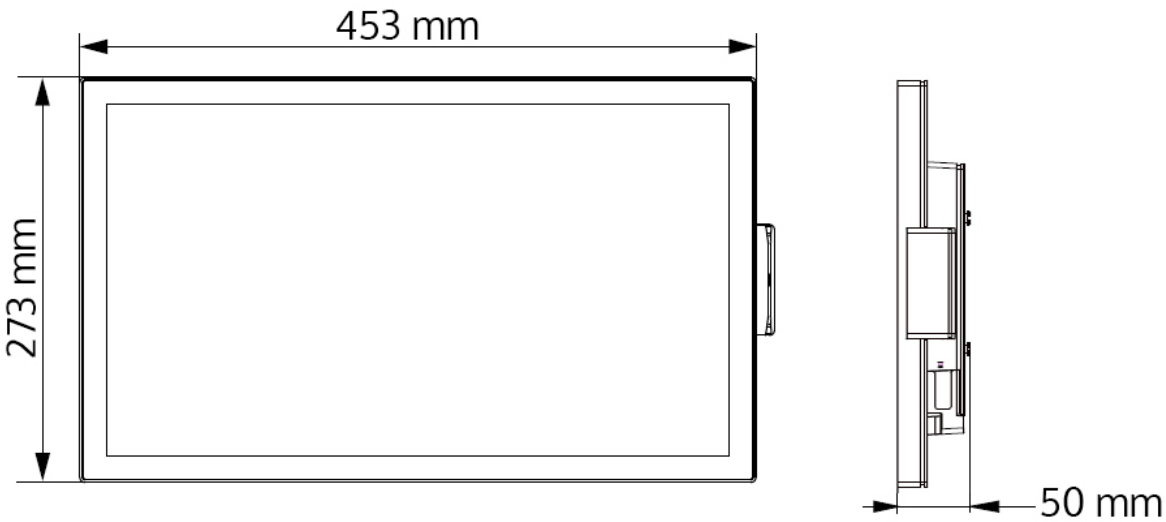

All specifications are subject to change without notice.