Features

- Intel N3350/4200 CPU
- Slim & Rugged Chassis
- Abundant Inputs/Outputs
- DIN Rail Mountable
- Wide Range DC 9~36V Power Input

Technical Specifications

Primary Components

Processor Family	Intel Celeron Apollo Lake
Processor Model	N3350 Dual Core
Processor Speed	Up to 2.4 GHz
Memory Type	1x DDR3L SO-DIMM
Memory Support	4GB, 8GB
Storage Type	mSATA
Storage Support	64GB (Standard), up to 256GB (Optional)

External I/O Ports

USB	1x USB 2.0, 1x USB 3.0 type C, 2x USB 3.0 (with lock)
Serial / Com	2x COM
Serial Protocol Detail	2x RS-232/422/485
Ethernet / LAN	2x RJ45 GbE LAN
Video Outputs	1x DisplayPort
Power Input Port	3-Pin DC-In (Phoenix Type)

Power

Input Voltage Range	9-36V DC
Max Power Consumption	33W
Standard Power Adapter	Optional 12V AC/DC Adapter

Operating Systems

Windows	Windows 10 IoT, Windows 10 Pro

Expansion Slots

Expansion Module support	Default expansion: 2 x COM (DB9); Optional expansion requires MOQ - 3 x COM (Terminal Block); 2 x USB 2.0; 16 channel GPIO
SD card	1x Micro SD Slot

Thermal & Environmental

Operating Temperature	-20°C - 60°C (-4°F – 140°F)
Storage Temperature	-40°C - 85°C (-40°F – 185°F)
Cooling Solution	Passive – Fanless with Heatsink
Humidity Range	10% – 90% Non-condensing
Storage Humidity	10% – 90% Non-condensing

Enclosure

Material	Aluminum
Color	Black, Gray
Led Indicator Light	Power
Control Buttons	Power Button
Mounting Options	DIN Rail Mount, Wall Mount

Peripherals & Wireless Connectivity

WiFi	Optional

Weight / Dimensions

Weight	.78 kg (172.0 lbs)
Dimensions	140 x 120 x 42 mm (5.5 x 4.7 x 1.7 in)

Warranty

Warranty	Up to 5 Years

I/O Diagram Images

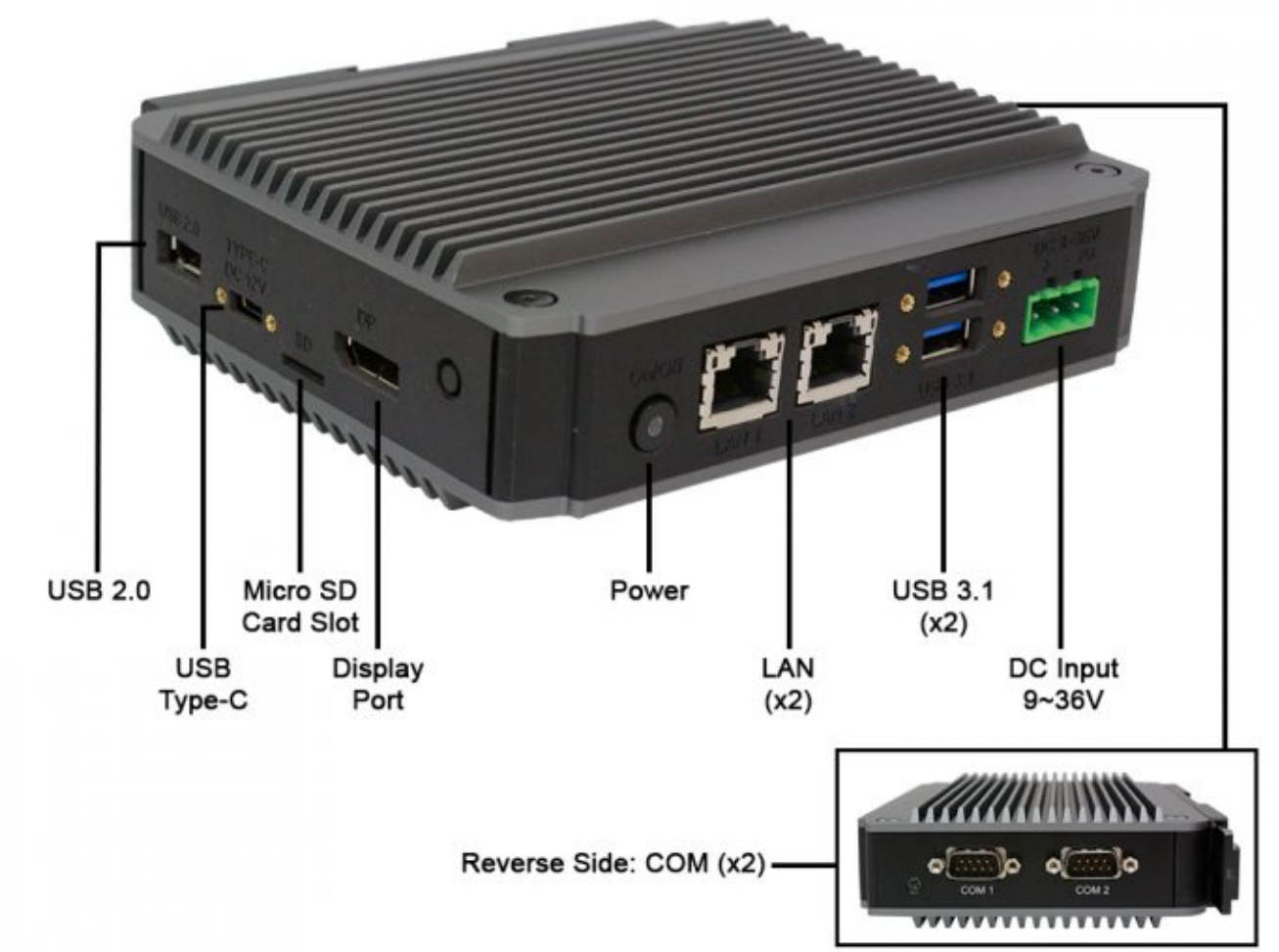

Tech Diagram Images

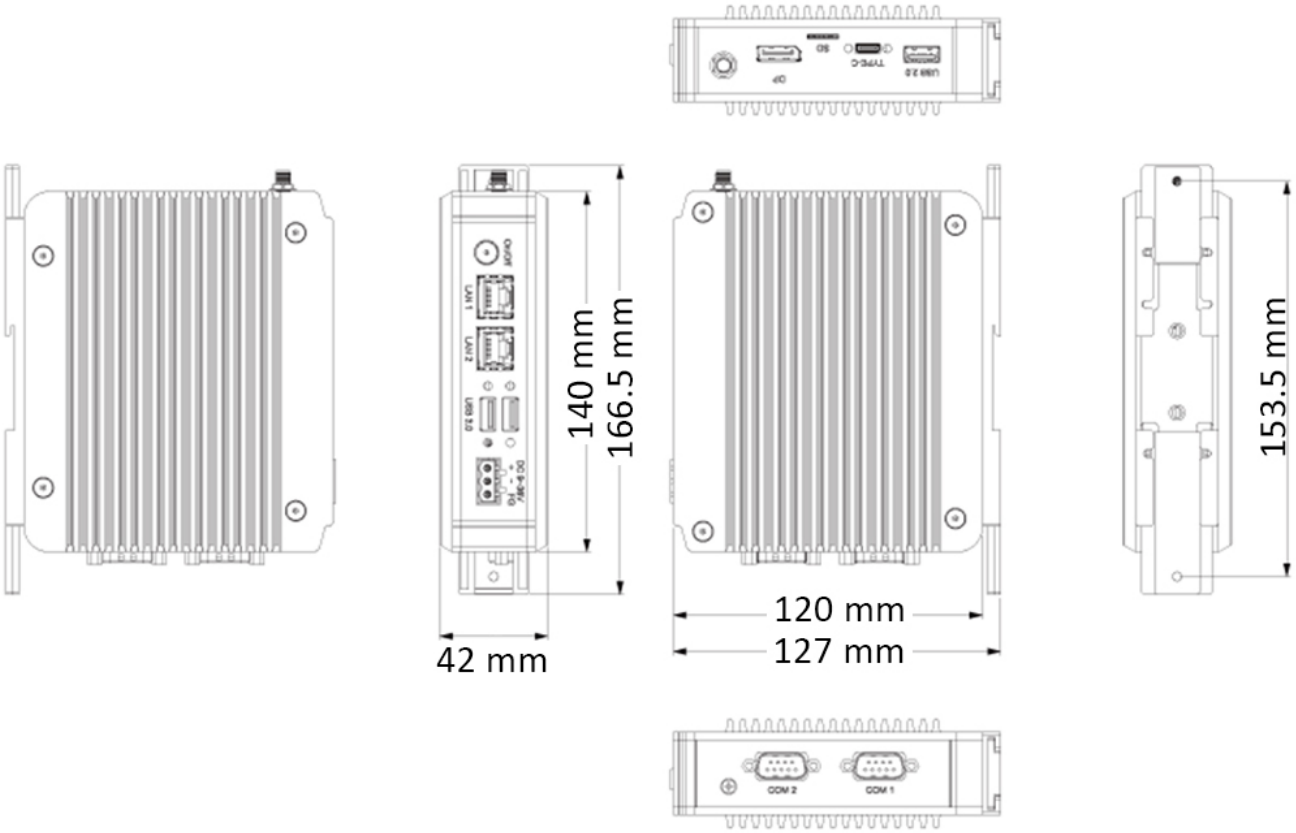

All specifications are subject to change without notice.