Features

- 18.5" LED LCD Touchscreen
- Intel Bay Trail Quad Core CPU
- Fanless Cooling System
- Aluminum Die-Cast Housing
- Integrated Webcam, WLAN, & BT 4.0

Technical Specifications

Primary Components

Processor Family	Intel Celeron Bay Trail
Processor Model	J1900 Quad Core
Processor Speed	2.0 GHz, 2.4 GHz
Memory Type	1x DDR3 SO-DIMM
Memory Support	2GB, 4GB, 8GB
Storage Type	1x 2.5" SATA Drive Bay for SSD/HDD
Storage Support	32GB-1TB

Display

Screen Size	18.5"
Screen Resolution	Optional 1920 x 1080, 1366 x 768
Screen Ratio	16:9
Brightness	250 nits

Touch Screen

Touch Screen	Projected Capacitive

External I/O Ports

USB	4x USB 2.0
Serial / Com	4x COM
Serial Protocol Detail	3x RJ-48
Ethernet / LAN	2x RJ45 GbE LAN
Video Outputs	1x VGA
Power Input Port	4-Pole DIN (latching)

Power

Input Voltage Range	12-48V DC
Standard Power Adapter	120W Power Adapter Included

Operating Systems

Windows	Windows 10 IoT, Windows 10 Pro, Windows 7 Pro
Linux	Linux

Compatibility

Security Hardware	TPM 2.0

Multimedia

Speakers	2x 2W Speakers
Camera	2MP Webcam

Thermal & Environmental

Operating Temperature	0°C - 35°C (32°F – 95°F)
Storage Temperature	-20°C - 60°C (-4°F – 140°F)
Cooling Solution	Passive – Fanless
Humidity Range	20% – 85% Non-condensing

Enclosure

Material	Aluminum
IP Rating	IP54 Front Bezel
Mounting Options	VESA 75 Mount

Peripherals & Wireless Connectivity

WiFi	802.11 b/g/n WLAN card
Bluetooth	Bluetooth 4.0
Barcode Scanner	Optional 1D/2D Barcode Scanner

Weight / Dimensions

Weight	6.8 kg (15.0 lbs)
Dimensions	4 x 284 x 48 mm mm (0.2 x 11.2 x 1.9 in)

Certification

Certifications	BIS, CCC, CE, FCC Class B, LVD

Warranty

Warranty	Up to 5 Years

Tech Diagram Images

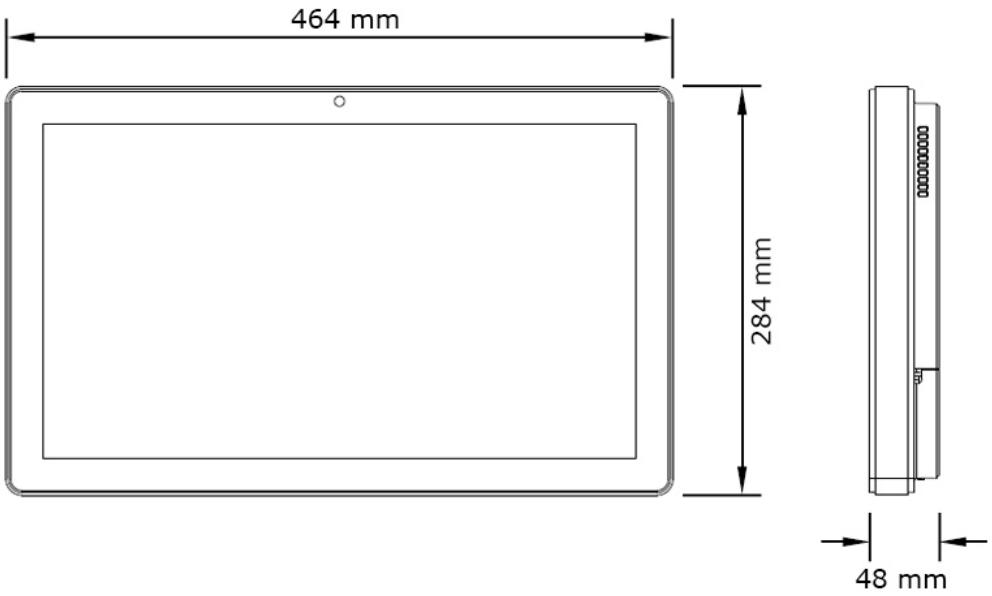

All specifications are subject to change without notice.