Features

- 15.6” Touchscreen Display
- Intel 11th Generation Tiger Lake Core i3/i5 CPU
- Fanless Cooling System
- Multiple I/Os including 2x USB 2.0, 1x LAN, and 1x COM

Technical Specifications

Primary Components

Processor Family	Intel Core I series 11th Generation Tiger Lake
Processor Model	Standard Core i3-1115G4E, optional upgrade to i5-1145G7E
Processor Speed	Up to 4.1 GHz
Memory Type	2x DDR4 SO-DIMM
Memory Support	4GB, 8GB, 16GB, 32GB, 64GB
Storage Type	1x M.2 2280 SSD slot, SATA3 or NVME
Storage Support	128GB-1TB

Display

Screen Size	15.6"
Screen Resolution	1920 x 1080 (Full HD)
Screen Ratio	16:9
Brightness	450 nits, Optional 1000 nit High Brightness

Touch Screen

Touch Screen	Projected Capacitive (Multi-touch)

External I/O Ports

USB	1x M12 8Pin for USB 1/2
Serial / Com	1x M12 8-pin for COM
Serial Protocol Detail	1x RS-232/422/485 (configured in BIOS), RS-232 default
Ethernet / LAN	1x M12 8pin RJ45 Gbe LAN
Other Ports	2x blank M12s are reserved for optional IO expansion
Power Input Port	M12 type 3-PIN DC-in

Power

Input Voltage Range	9-36V DC
Max Power Consumption	32W
Standard Power Adapter	Optional IP67, AC 90-305V Input, 96W OR Non-IP65, AC 90-305V Input, 90W

Operating Systems

Windows	Windows 10 IoT, Windows 10 Pro, Windows 11 Pro

Compatibility

Security Hardware	TPM 2.0

Expansion Slots

Internal M.2	1x M.2 2230 Key E (for WiFi expansion option)

Thermal & Environmental

Operating Temperature	0°C - 50°C (32°F – 122°F (i3/i5))
Storage Temperature	-30°C - 70°C (-22°F – 158°F)
Cooling Solution	Passive – Fanless
Humidity Range	10% – 90% Non-condensing
Storage Humidity	10% – 90% Non-condensing

Enclosure

Material	SUS304 Stainless Steel
IP Rating	IP69K
Color	Stainless Steel
Control Buttons	Power Switch
Mounting Options	Floor Stand, Swing Arm, VESA 100 Mount

Peripherals & Wireless Connectivity

WiFi	Optional WiFi + Bluetooth, Flat Antenna, Supports WIFI 6 (AX)
Bluetooth	Optional Bluetooth 5.2
Sim Card	1x Nano SIM Card Slot
RFID	Optional RFID module on front side, project only

Weight / Dimensions

Weight	5.1 kg (11.2 lbs)
Dimensions	404.4 x 225.4 x 64.9 mm (15.9 x 8.9 x 2.6 in)

Certification

Certifications	CE, FCC

Warranty

Warranty	Up to 5 Years

I/O Diagram Images

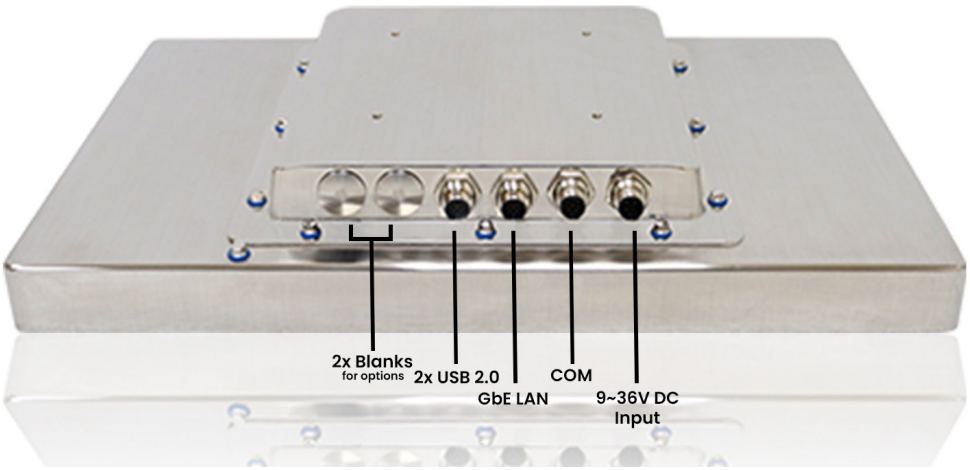

Tech Diagram Images

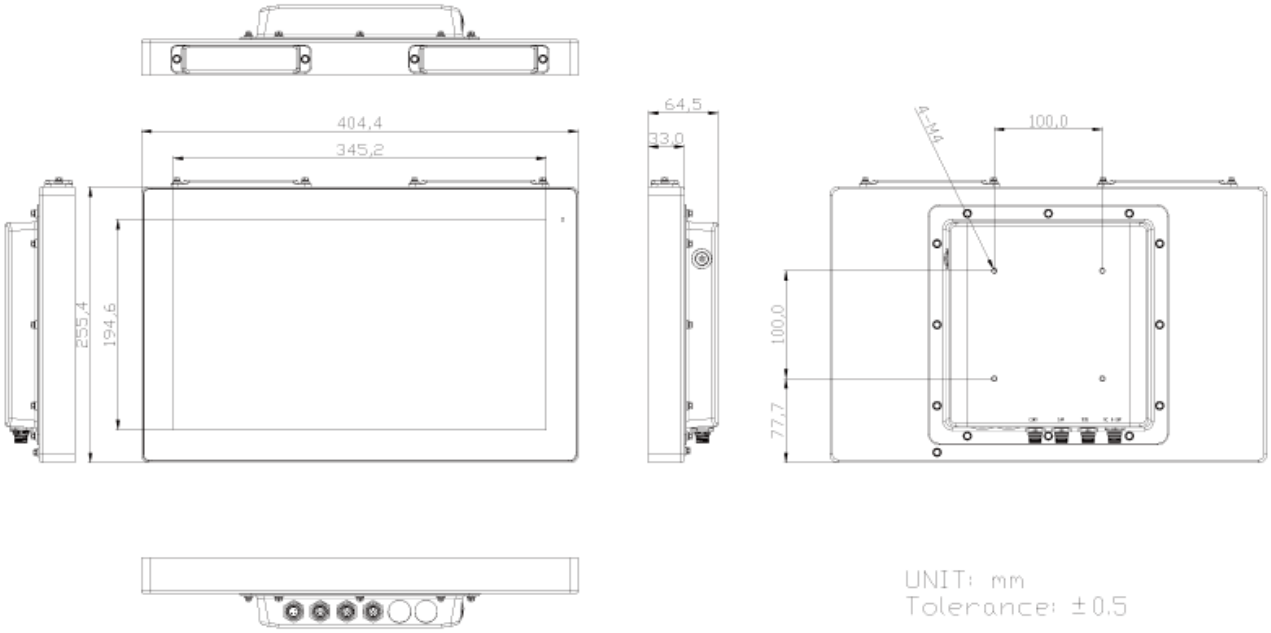

All specifications are subject to change without notice.