Features

- 17” TFT-LCD with 4:3 Screen Ratio
- Intel Apollo Lake N4200 Quad Core CPU
- IP66 Front Bezel & Aluminum Housing
- Optional High Bright & Optical Bonding
- Projected Capacitive or Resistive Touch

Technical Specifications

Primary Components

Processor Family	Intel Pentium Apollo Lake
Processor Model	N4200
Processor Speed	1.10 GHz
Memory Type	Onboard DDR3
Memory Support	4GB, 8GB
Storage Type	1x 2.5" SATA Drive Bay for SSD/HDD
Storage Support	32GB-1TB

Display

Screen Size	17"
Screen Resolution	1280 x 1024 (SXGA)
Screen Ratio	4:3
Brightness	Optional 1000 nit High Brightness, 350 nits

Touch Screen

Touch Screen	Projected Capacitive, Resistive

External I/O Ports

USB	2x USB 3.0
Serial / Com	2x COM
Serial Protocol Detail	1x RS-232/422/485 DB-9, default RS-232(COM1), 1x RS-232 DB-9(COM2)
Ethernet / LAN	2x RJ45 GbE LAN
Video Outputs	1x HDMI
Other Ports	1x 2-Pin DC Power Switch Connector
Audio Ports	1x Audio Line-Out
Power Input Port	Optional POE++, 45W with 2x USB 2.0, 3-Pin DC-In (Phoenix Type)

Power

Input Voltage Range	9-36V DC
Standard Power Adapter	Optional 12V AC/DC Adapter

Battery

Battery Type	Optional Internal Battery

Operating Systems

Windows	Windows 10 IoT, Windows 10 Pro
Linux	Linux (Contact your sales rep for more information)

Expansion Slots

SD card	1x Micro SD Slot

Thermal & Environmental

Operating Temperature	-20°C - 60°C (-4°F – 140°F)
Storage Temperature	-30°C - 70°C (-22°F – 158°F)
Cooling Solution	Passive – Fanless with Heatsink
Humidity Range	10% – 90% Non-condensing

Enclosure

Material	Aluminum
IP Rating	IP66 Front Bezel
Mounting Options	Panel Mount, VESA 100 Mount

Peripherals & Wireless Connectivity

WiFi	Optional WiFi
Bluetooth	Optional Bluetooth 4.0
Mobile Network 4G LTE	Optional 4G

Weight / Dimensions

Weight	6.3 kg (13.9 lbs)
Dimensions	439 x 348 x 64.8 mm (17.3 x 13.7 x 2.6 in)

Certification

Certifications	CE, FCC Class A, UL 60950, UL 62368

Warranty

Warranty	Up to 5 Years

I/O Diagram Images

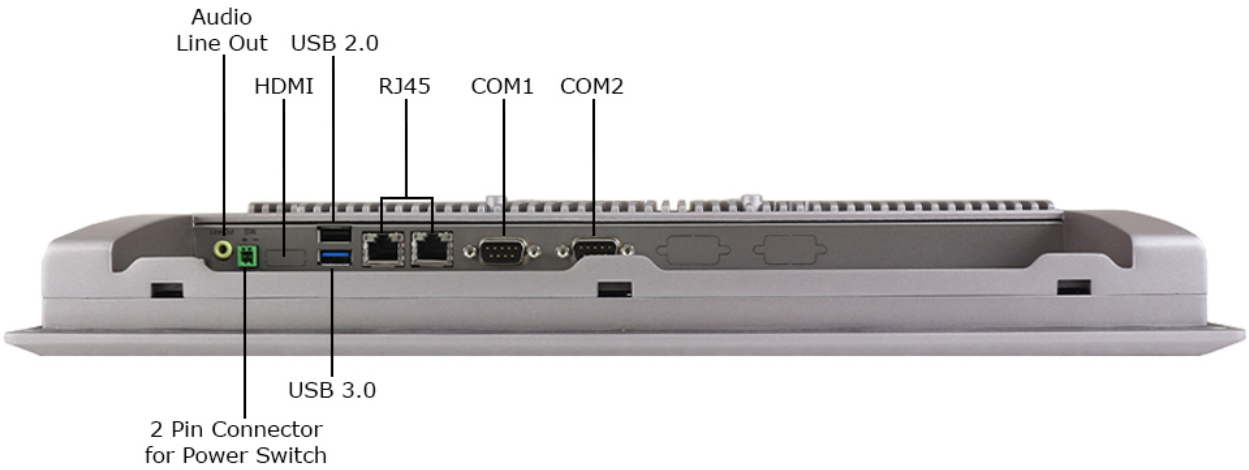

Tech Diagram Images

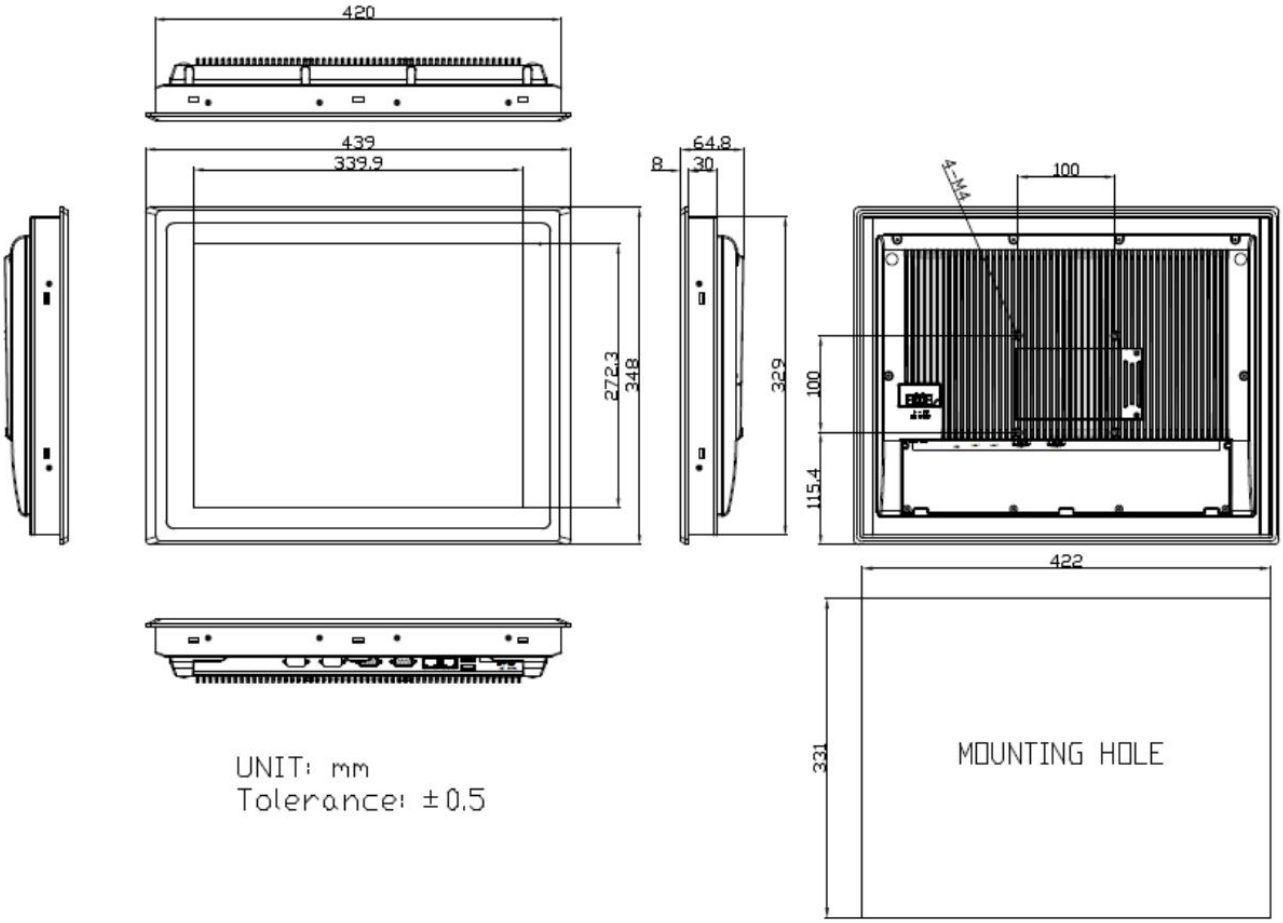

All specifications are subject to change without notice.