Features

- 15.6" True Flat IP65 Protected Touchscreen
- Intel Skylake Celeron/Core i5 CPU
- TPM 2.0, Intel vPro Supported*
- Sleek, Fanless Design
- Rugged Metal Housing

Technical Specifications

Primary Components

Processor Family	Intel Celeron or Core I 6th Generation Skylake
Processor Model	Celeron 3955U; Core- i5-6300U
Processor Speed	Base 2.0 GHz
Memory Type	2x DDR4 SO-DIMM
Memory Support	4GB, 8GB, 16GB, 32GB
Storage Type	1x 2.5" SATA Drive Bay for SSD/HDD
Storage Support	32GB-1TB

Display

Screen Size	15.6"
Screen Resolution	1366 x 768, Optional 1920 x 1080
Screen Ratio	16:9
Brightness	220 nits

Touch Screen

Touch Screen	Projected Capacitive

External I/O Ports

USB	4x USB 3.0
Serial / Com	2x COM
Serial Protocol Detail	RJ-48, support RS-232
Ethernet / LAN	2x RJ45 GbE LAN
Video Outputs	1x HDMI
Other Ports	Optional Isolated I/O: RS-232, RJ45 LAN, USB
Audio Ports	1x 3.5mm Microphone Jack, 1x Audio Line-Out

Power

Input Voltage Range	12-48V DC
Standard Power Adapter	19V AC/DC Adapter included by default, 65W/19V AC/DC Adapter

Operating Systems

Windows	Windows 10 IoT, Windows 10 Pro
Linux	Linux (Contact your sales rep for more information)

Compatibility

Security Hardware	TPM 2.0, Intel vPro *Not available with Celeron

Expansion Slots

Internal M.2	1x M.2 Slot half-size Type E

Multimedia

Speakers	2x 2W Speakers
Camera	2MP Webcam

Thermal & Environmental

Operating Temperature	0°C - 40°C (32°F – 104°F)
Storage Temperature	-20°C - 60°C (-4°F – 140°F)
Cooling Solution	Passive – Fanless
Humidity Range	20% – 85% Non-condensing

Enclosure

Material	Aluminum
IP Rating	IP65 Front Bezel
Color	Black
Mounting Options	VESA 75 Mount

Peripherals & Wireless Connectivity

WiFi	Optional 802.11 b/g/n WLAN card and Bluetooth 4.0

Weight / Dimensions

Weight	4.5 kg (9.9 lbs)
Dimensions	396 x 48 x 245 mm (15.6 x 1.9 x 9.6 in)

Certification

Certifications	60601-1 4th Edition, CE, FCC Class B

Warranty

Warranty	Up to 5 Years

I/O Diagram Images

Tech Diagram Images

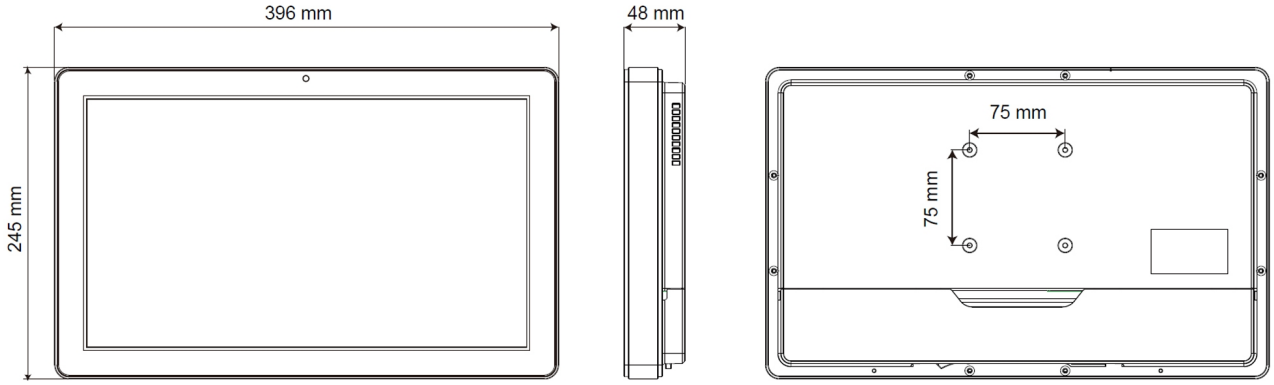

All specifications are subject to change without notice.