Features

- 21.5” Display with PCAP Touchscreen
- Qualcomm OctaCore CPU and Android 9.0
- Customizable, Modular, Expandable
- Removable Box PC, Wi-Fi/BT
- Optional PoE

Technical Specifications

Primary Components

Processor Model	MSM8953 OctaCore
Memory Type	Onboard DDR3
Storage Support	32GB

Display

Screen Size	21.5
Resolution	1920 x 1080 (Full HD)
Brightness	300 nits

Touch Screen

Touch Screen	Projected Capacitive (Multi-touch)

External I/O Ports

USB	1x USB 3.0 type C, 2x USB 2.0, 2x USB 3.0
Serial / Com	2x COM
Serial Protocol Detail	2x DB9 (Powered RS232) (COM1 0V*/5V, COM2 0V*/12V)
Ethernet / LAN	1x RJ45 GbE LAN
Other Ports	1x RJ11
Power Input Port	4-Pole DIN (latching)

Power

Input Voltage Range	19V DC

Operating Systems

Android	Android 9.0

Multimedia

Speakers	1x 3W Speaker
Camera	Optional Webcam

Thermal & Environmental

Operating Temperature	0°C - 35°C (32°F – 95°F)
Storage Temperature	-20°C - 60°C (-4°F – 140°F)
Cooling Solution	Passive – Fanless
Humidity Range	20% – 85% Non-condensing

Enclosure

Material	Plastic
IP Rating	IP54 Front Bezel
Color	Black
Led Indicator Light	Power
Control Buttons	Power Button
Mounting Options	VESA 100 Mount, VESA 75 Mount

Peripherals & Wireless Connectivity

WiFi	WiFi/BT (a/b/g/n)
Barcode Scanner	1D/2D Barcode Scanner
RFID	Optional RFID
Peripheral Other	3-Track MSR; Fingerprint Reader; Supported Verifone® VX820, P400, Ingenico iPP 325; POS Stand; Printer Stand; Floor Stand; Printer, Epson® TM-m30 / TM-T88IV, Star mc-Print3/ TSP-100/TSP-654

Weight / Dimensions

Weight	11.7 kg (25.8 lbs)
Dimensions	519 x 311 x 49 mm (20.4 x 12.2 x 1.9 in)

Certification

Certifications	CE, FCC Class A, LVD

Warranty

Warranty	Up to 5 Years

I/O Diagram Images

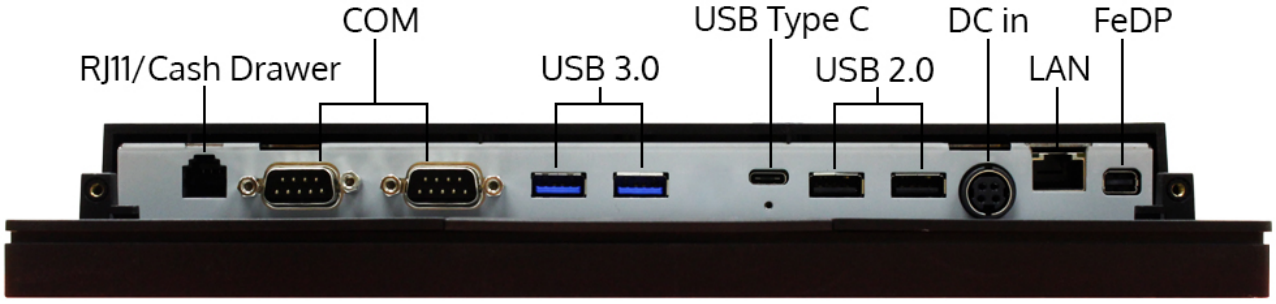

Tech Diagram Images

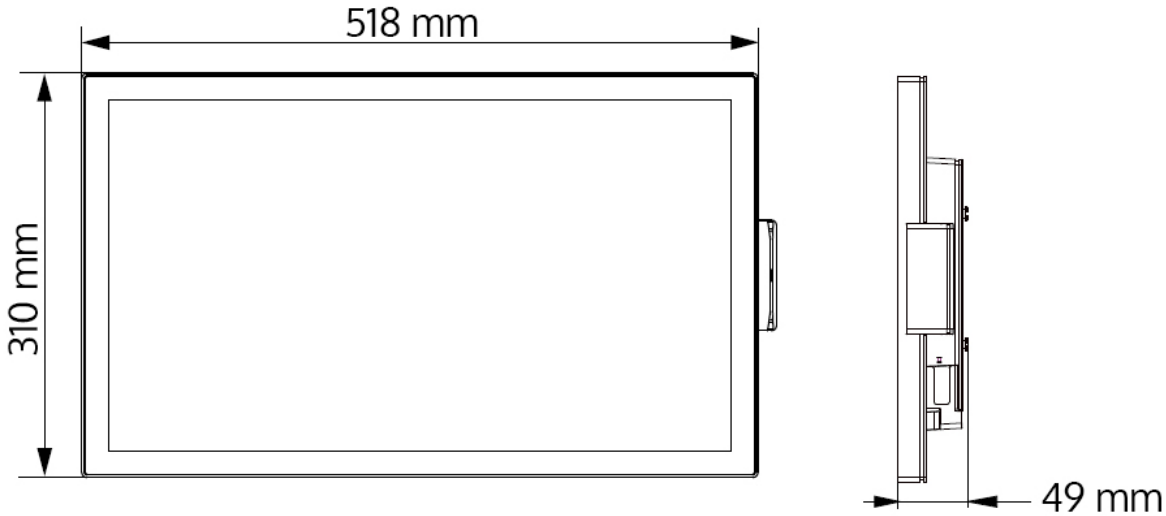

All specifications are subject to change without notice.