TEGUAR

# TP-A945-12

## 12" Android Industrial Panel PC




## Key Highlights

- 12.1" Resistive or P-Cap Touch Screen Panel
- ARM Cortex A9 CPU
- Onboard DDR3 1GB Memory
- Onboard 4GB eMMC Flash
- IP65 Protected Front Bezel
- Wide Range Power Input

VIEW ONLINE

The TP-A945-12 Android Panel PC combines durability with the ability to easily integrate into your mobile environment. They are a great solution to replace your PLC or HMI windows-based touch panel PCs. At a lower price point using the proven android platform, the TP-A945-12 easily runs your IoT cloud-based applications. Rugged IP65 front rating ensures a high performing low-cost solution for your HMI applications such as meeting room signage, building automation, security, temperature control, and factory automation. The TP-A945 series include the Android 6.0 Marshmallow OS, which releases the full capabilities of the platform to developers.

**USA**
Teguar
2920 Whitehall Park Drive
Charlotte, NC 28273
+1 866-693-3105
sales@teguar.com

**EUROPE**
Teguar Europe AG
Churerstrasse 54, CH-8808
Pfäffikon, Switzerland
+41 41 561 53 11
sales.EU@teguar.com

**ASIA**
Teguar Taiwan Ltd.
Rm. A, 28F-12., No.99, Sec. 1, Xintai 5th Rd.,
Xizhi Dist., New Taipei City 221, Taiwan (R.O.C.)
+886 2 7751 5319
sales@teguar.com.tw

# Technical Specifications

## Primary Components

| | |
|---|---|
| **Processor Family** | ARM Cortex A9 |
| **Processor Speed** | 1.0 GHz |
| **Memory Type** | Onboard DDR3 |
| **Memory Support** | 1GB |
| **Storage Support** | 4GB |

## External I/O Ports

| | |
|---|---|
| **USB** | 1x Micro USB Port, 2x USB 2.0 |
| **Serial / Com** | 1x COM |
| **Serial Protocol Detail** | 1x RS-232/422/485 DB-9 |
| **Ethernet / LAN** | 1x RJ45 GbE LAN |
| **Power Input Port** | 3-Pin DC-In (Phoenix Type) |

## Expansion Slots

| | |
|---|---|
| **SD card** | 1x Micro SD Slot |

## Enclosure

| | |
|---|---|
| **Material** | Plastic |
| **IP Rating** | IP65 Front Bezel |
| **Mounting Options** | Panel Mount, VESA Mount, Wall Mount |

## Weight / Dimensions

| | |
|---|---|
| **Weight** | 1.5 kg (3.3 lbs) |
| **Dimensions** | 319 x 51 x 245 mm (12.6 x 2.0 x 9.6 in) |

## Warranty

| | |
|---|---|
| **Warranty** | Up to 5 Years |

***Specifications subject to change.***

## Display

| | |
|---|---|
| **Screen Size** | 12.1" |
| **Screen Ratio** | 4:3 |
| **Brightness** | 450 nits |

## Touch Screen

| | |
|---|---|
| **Touch Screen** | Projected Capacitive, Resistive |

## Power

| | |
|---|---|
| **Input Voltage Range** | 9-36V DC |
| **Standard Power Adapter** | Optional 12V AC/DC Adapter |

## Operating Systems

| | |
|---|---|
| **Android** | Android 6.0.1 |
| **Linux** | Linux 4.1.15 |

## Thermal & Environmental

| | |
|---|---|
| **Operating Temperature** | 0°C - 50°C (32°F – 122°F) |
| **Storage Temperature** | -20°C - 60°C (-4°F – 140°F) |
| **Cooling Solution** | Passive – Fanless with Heatsink |
| **Humidity Range** | 10% – 90% Non-condensing |

## Peripherals & Wireless Connectivity

| | |
|---|---|
| **WiFi** | Optional WiFi/3G Module (via mini-PCIe) |
| **Sim Card** | 1x SIM Card Slot |

## Certification

| | |
|---|---|
| **Certifications** | CE, FCC Class A |


**USA**
**Teguar**
**2920 Whitehall Park Drive**
**Charlotte, NC 28273**
**+1 866-693-3105**
**sales@teguar.com**

**EUROPE**
**Teguar Europe AG**
**Churerstrasse 54, CH-8808**
**Pfäffikon, Switzerland**
**+41 41 561 53 11**
**sales.EU@teguar.com**

**ASIA**
**Teguar Taiwan Ltd.**
**Rm. A, 28F-12., No.99, Sec. 1, Xintai 5th Rd.,**
**Xizhi Dist., New Taipei City 221, Taiwan (R.O.C.)**
**+886 2 7751 5319**
**sales@teguar.com.tw**

## I/O Diagram Images




**USA**
Teguar
2920 Whitehall Park Drive
Charlotte, NC 28273
+1 866-693-3105
sales@teguar.com

**EUROPE**
Teguar Europe AG
Churerstrasse 54, CH-8808
Pfäffikon, Switzerland
+41 41 561 53 11
sales.EU@teguar.com

**ASIA**
Teguar Taiwan Ltd.
Rm. A, 28F-12., No.99, Sec. 1, Xintai 5th Rd.,
Xizhi Dist., New Taipei City 221, Taiwan (R.O.C.)
+886 2 7751 5319
sales@teguar.com.tw

## Tech Diagram Images

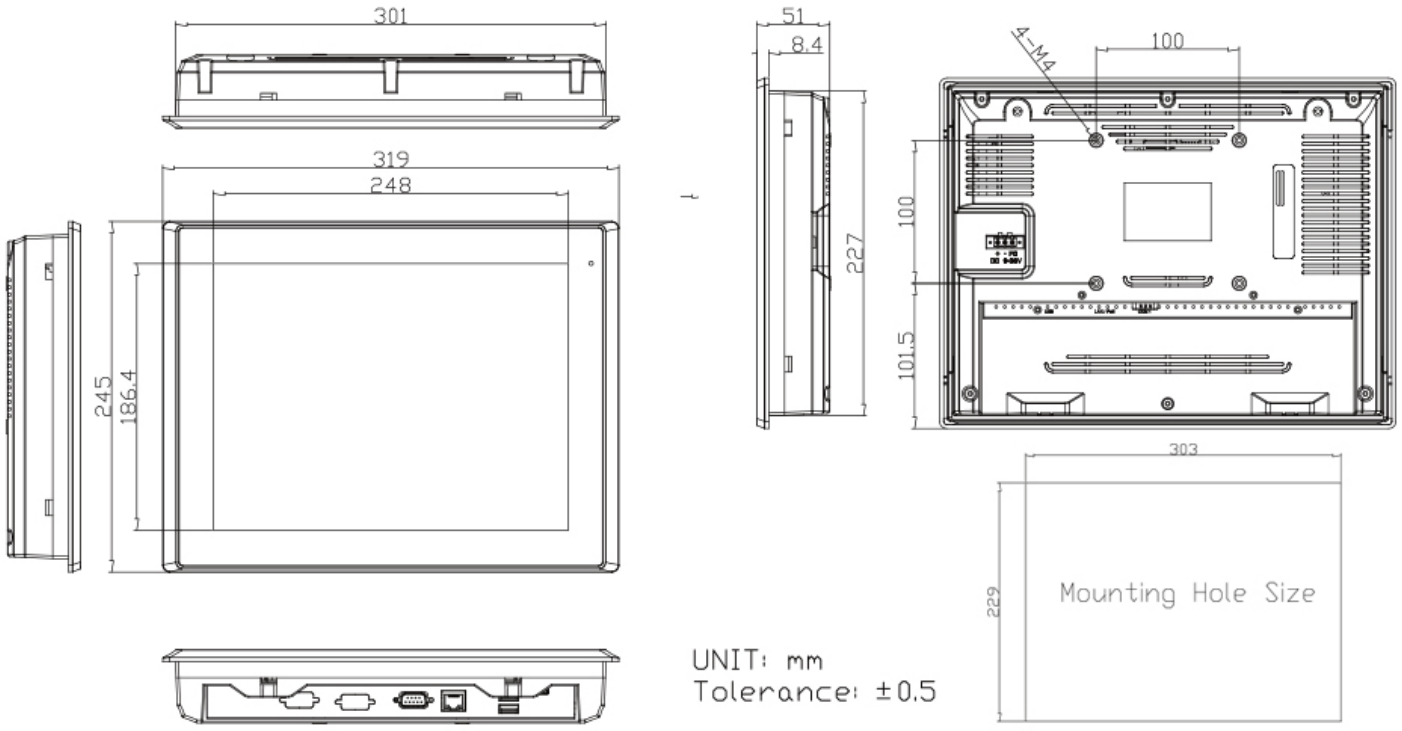


**USA**
Teguar
2920 Whitehall Park Drive
Charlotte, NC 28273
+1 866-693-3105
sales@teguar.com

**EUROPE**
Teguar Europe AG
Churerstrasse 54, CH-8808
Pfäffikon, Switzerland
+41 41 561 53 11
sales.EU@teguar.com

**ASIA**
Teguar Taiwan Ltd.
Rm. A, 28F-12., No.99, Sec. 1, Xintai 5th Rd.,
Xizhi Dist., New Taipei City 221, Taiwan (R.O.C.)
+886 2 7751 5319
sales@teguar.com.tw