TEGUAR

TP-A945-07

7" Android Panel PC



Key Highlights

- 7" True Flat Panel Touch Screen Panel
- ARM Cortex A9 CPU
- Wide Range Power Input
- Onboard DDR3 1GB Memory
- IP65 Protected Front Bezel
- Onboard 4GB eMMC Flash

VIEW ONLINE

The TP-A945-07 Android touchscreen computer is a cost effective alternative to traditional Windows based panel PCs. The proven Android platform is perfect for web based applications and is easily integrated into industrial manufacturing applications. Unlike typical Android tablets and computers, the TP-A945-07 Android touchscreen includes a rugged enclosure and IP65 front bezel, which allows for durability and reliability in any environment. This low-cost solution is perfect for applications such as factory automation, building automation, security, and IoT cloud based solutions. The TP-A945 series include the Android 6.0 Marshmallow OS, which releases the full capabilities of the platform to developers.

USA
Teguar
2920 Whitehall Park Drive
Charlotte, NC 28273
+1 866-693-3105
sales@teguar.com

EUROPE
Teguar Europe AG
Churerstrasse 54, CH-8808
Pfäffikon, Switzerland
+41 41 561 53 11
sales.EU@teguar.com

ASIA
Teguar Taiwan Ltd.
Rm. A, 28F-12., No.99, Sec. 1, Xintai 5th Rd.,
Xizhi Dist., New Taipei City 221, Taiwan (R.O.C.)
+886 2 7751 5319
sales@teguar.com.tw

Technical Specifications

Primary Components

Processor Family	ARM Cortex A9
Processor Speed	1.0 GHz
Memory Type	Onboard DDR3
Memory Support	1GB
Storage Support	4GB

External I/O Ports

USB	1x Micro USB Port, 2x USB 2.0
Serial / Com	1x COM
Serial Protocol Detail	1x RS-232/422/485 DB-9
Ethernet / LAN	1x RJ45 GbE LAN
Audio Ports	1x Audio Line-Out
Power Input Port	3-Pin DC-In (Phoenix Type)

Thermal & Environmental

Operating Temperature	0°C - 50°C (32°F – 122°F)
Storage Temperature	-20°C - 60°C (-4°F – 140°F)
Cooling Solution	Passive – Fanless with Heatsink
Humidity Range	10% – 90% Non-condensing

Peripherals & Wireless Connectivity

WiFi	Optional WiFi/3G Module (via mini-PCIe)
Sim Card	1x SIM Card Slot

Certification

Certifications	CE, FCC Class A

Display

Screen Size	7"
Screen Ratio	5:3
Brightness	350 nits

Touch Screen

Touch Screen	Projected Capacitive, Resistive

Power

Input Voltage Range	9-36V DC
Standard Power Adapter	Optional 12V AC/DC Adapter

Operating Systems

Android	Android 6.0.1
Linux	Linux 4.1.15

Expansion Slots

SD card	1x Micro SD Slot

Enclosure

Material	Plastic
IP Rating	IP65 Front Bezel
Mounting Options	Panel Mount, VESA Mount, Wall Mount

Weight / Dimensions

Weight	0.9 kg (2.0 lbs)
Dimensions	204 x 42.5 x 150 mm (8.0 x 1.7 x 5.9 in)

Warranty

Warranty	Up to 5 Years

Specifications subject to change.

USA
Teguar
2920 Whitehall Park Drive
Charlotte, NC 28273
+1 866-693-3105
sales@teguar.com

EUROPE
Teguar Europe AG
Churerstrasse 54, CH-8808
Pfäffikon, Switzerland
+41 41 561 53 11
sales.EU@teguar.com

ASIA
Teguar Taiwan Ltd.
Rm. A, 28F-12., No.99, Sec. 1, Xintai 5th Rd.,
Xizhi Dist., New Taipei City 221, Taiwan (R.O.C.)
+886 2 7751 5319
sales@teguar.com.tw

I/O Diagram Images



USA
Teguar
2920 Whitehall Park Drive
Charlotte, NC 28273
+1 866-693-3105
sales@teguar.com

EUROPE
Teguar Europe AG
Churerstrasse 54, CH-8808
Pfäffikon, Switzerland
+41 41 561 53 11
sales.EU@teguar.com

ASIA
Teguar Taiwan Ltd.
Rm. A, 28F-12., No.99, Sec. 1, Xintai 5th Rd.,
Xizhi Dist., New Taipei City 221, Taiwan (R.O.C.)
+886 2 7751 5319
sales@teguar.com.tw

Tech Diagram Images

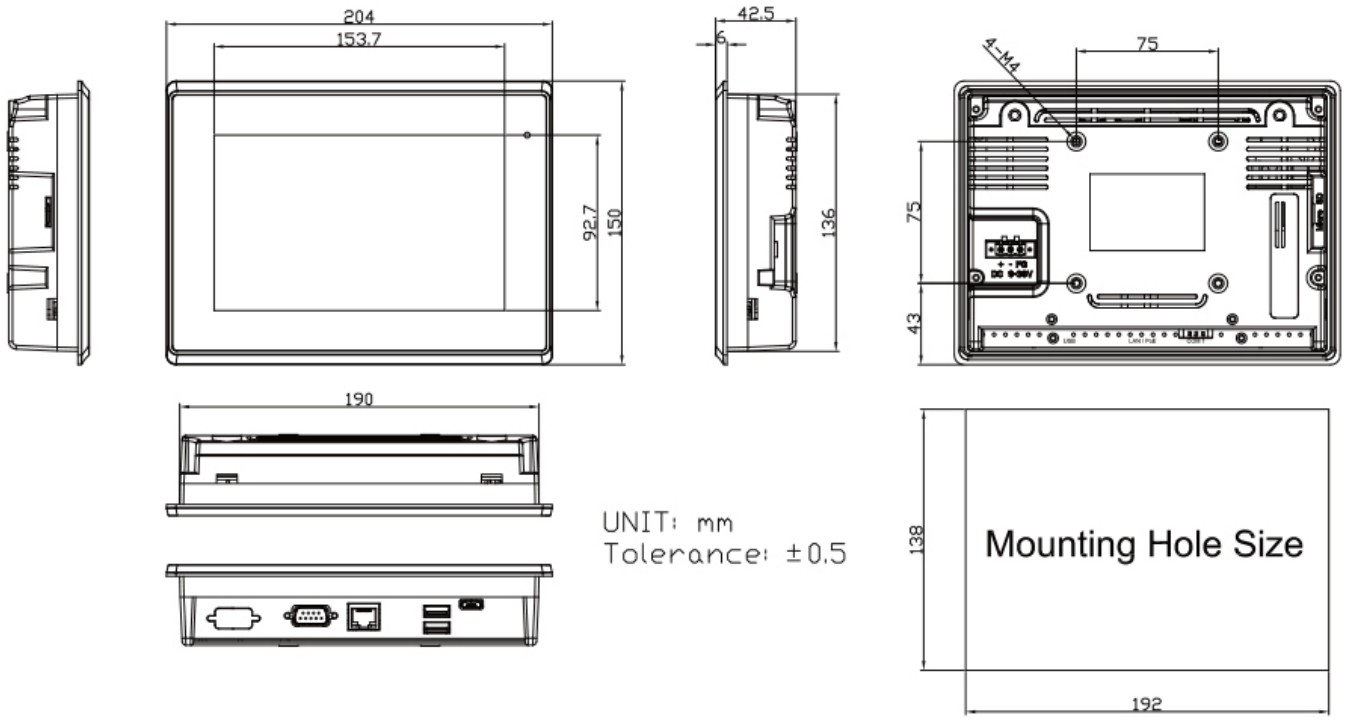

USA
Teguar
2920 Whitehall Park Drive
Charlotte, NC 28273
+1 866-693-3105
sales@teguar.com

EUROPE
Teguar Europe AG
Churerstrasse 54, CH-8808
Pfäffikon, Switzerland
+41 41 561 53 11
sales.EU@teguar.com

ASIA
Teguar Taiwan Ltd.
Rm. A, 28F-12., No.99, Sec. 1, Xintai 5th Rd.,
Xizhi Dist., New Taipei City 221, Taiwan (R.O.C.)
+886 2 7751 5319
sales@teguar.com.tw