TEGUAR

TSP-2945-17

17" Industrial Touch Screen PC



Key Highlights

- 17" Resistive or Projected Capacitive Touchscreen
- Intel Celeron N2930 Processor
- 304 Stainless Steel Front Bezel (Optional 316)
- Aluminum Back Cover and Fanless Design
- Wide Range DC 9~36V Power Input

VIEW ONLINE

The TSP-2945-17 has a stainless steel front panel and aluminum back cover. The front bezel is IP66/IP69K compliant, so when panel mounted, this panel PC is an ideal waterproof solution for food and beverage manufacturing or industrial applications exposed to liquids, sprays or humidity. The TSP-2945-17 can also be VESA mounted and it has an aluminum back cover. This PC has an Intel Celeron processor and supports Windows 7, Windows 8.1, and Windows 10 IoT. The TSP-2945 series is available in screen sizes from 7" – 22".

USA
Teguar
2920 Whitehall Park Drive
Charlotte, NC 28273
+1 866-693-3105
sales@teguar.com

EUROPE
Teguar Europe AG
Churerstrasse 54, CH-8808
Pfäffikon, Switzerland
+41 41 561 53 11
sales.EU@teguar.com

ASIA
Teguar Taiwan Ltd.
Rm. A, 28F-12., No.99, Sec. 1, Xintai 5th Rd.,
Xizhi Dist., New Taipei City 221, Taiwan (R.O.C.)
+886 2 7751 5319
sales@teguar.com.tw

Technical Specifications

Primary Components

Processor Family	Intel Celeron Bay Trail
Processor Model	N2930
Processor Speed	1.83 GHz
Memory Type	Onboard DDR3
Memory Support	4GB
Storage Type	1x 2.5" SATA Drive Bay for SSD/HDD (easily accessible)
Storage Support	32GB-1TB

Power

Input Voltage Range	9-36V DC
Max Power Consumption	23W
Standard Power Adapter	Optional 12V AC/DC Adapter

Operating Systems

Windows	Windows 10 IoT, Windows 10 Pro, Windows 7 Pro, Windows 8.1 Pro

Thermal & Environmental

Operating Temperature	0°C - 50°C (32°F – 122°F)
Storage Temperature	-30°C - 70°C (-22°F – 158°F)
Cooling Solution	Passive – Fanless
Storage Humidity	10% – 90% Non-condensing

Weight / Dimensions

Weight	5.1 kg (11.2 lbs)
Dimensions	449 x 358 x 63.8 mm (17.7 x 14.1 x 2.5 in)

Display

Screen Size	17"
Screen Ratio	5:4
Brightness	350 nits, Optional 1000 nit High Brightness

Touch Screen

Touch Screen	Projected Capacitive, Resistive

External I/O Ports

USB	2x USB 3.0
Serial / Com	2x COM
Serial Protocol Detail	1x RS-232/422/485 DB-9, default RS-232(COM1), 1x RS-232 DB-9(COM2)
Ethernet / LAN	2x RJ45 GbE LAN
Video Outputs	1x Optional HDMI
Audio Ports	1x Audio Line-Out
Power Input Port	3-Pin DC-In (Phoenix Type)

Enclosure

Material	Aluminum, Optional SUS316 Stainless Steel, SUS304 Stainless Steel
IP Rating	IP66 Front Bezel, IP69K Front Bezel
Mounting Options	Panel Mount, VESA 100 Mount
Approved Cleaning Solutions	Acetone, Alcohol, Club Soda, Hydrochloric Acid, Methyl Alcohol, Mineral Spirits, Nitric Acid, Sulfuric Acid (low concentration), Vinegar, Warm Water

Certification

Certifications	CE, FCC Class A

Warranty

Warranty	Up to 5 Years

Specifications subject to change.

USA
Teguar
2920 Whitehall Park Drive
Charlotte, NC 28273
+1 866-693-3105
sales@teguar.com

EUROPE
Teguar Europe AG
Churerstrasse 54, CH-8808
Pfäffikon, Switzerland
+41 41 561 53 11
sales.EU@teguar.com

ASIA
Teguar Taiwan Ltd.
Rm. A, 28F-12., No.99, Sec. 1, Xintai 5th Rd.,
Xizhi Dist., New Taipei City 221, Taiwan (R.O.C.)
+886 2 7751 5319
sales@teguar.com.tw

I/O Diagram Images



USA
Teguar
2920 Whitehall Park Drive
Charlotte, NC 28273
+1 866-693-3105
sales@teguar.com

EUROPE
Teguar Europe AG
Churerstrasse 54, CH-8808
Pfäffikon, Switzerland
+41 41 561 53 11
sales.EU@teguar.com

ASIA
Teguar Taiwan Ltd.
Rm. A, 28F-12., No.99, Sec. 1, Xintai 5th Rd.,
Xizhi Dist., New Taipei City 221, Taiwan (R.O.C.)
+886 2 7751 5319
sales@teguar.com.tw

Tech Diagram Images

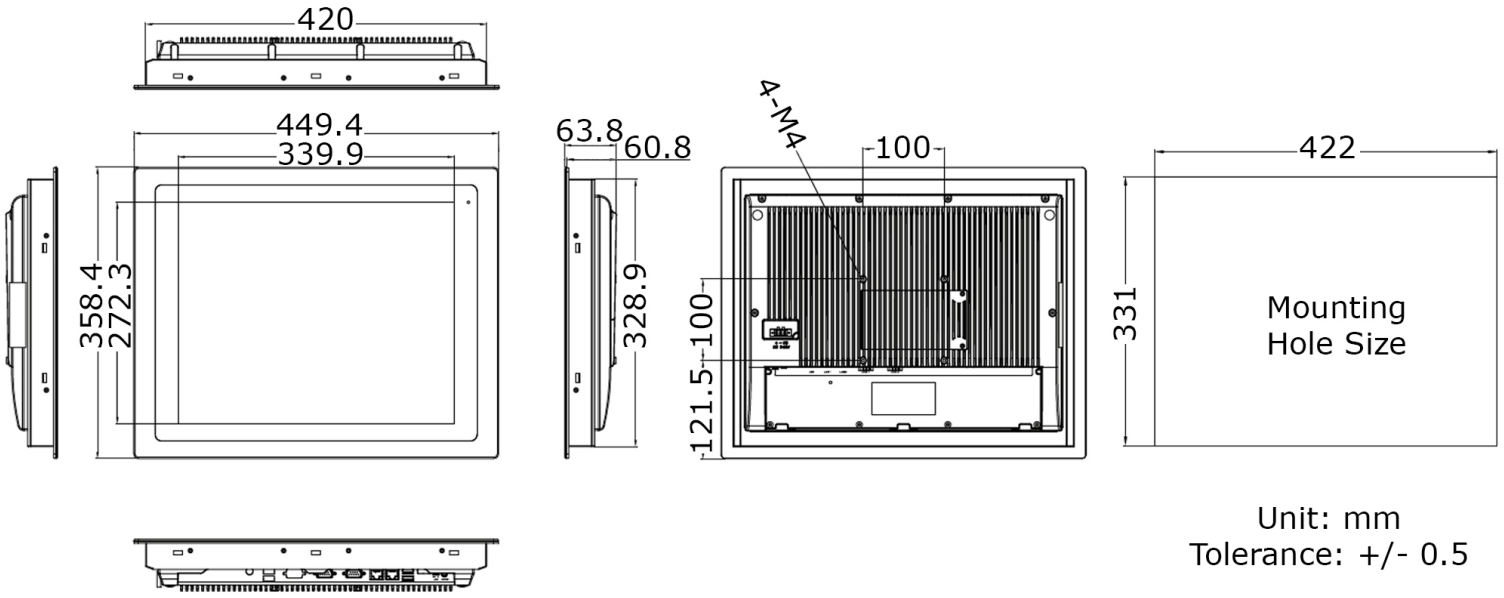

Unit: mm
Tolerance: +/- 0.5

USA
Teguar
2920 Whitehall Park Drive
Charlotte, NC 28273
+1 866-693-3105
sales@teguar.com

EUROPE
Teguar Europe AG
Churerstrasse 54, CH-8808
Pfäffikon, Switzerland
+41 41 561 53 11
sales.EU@teguar.com

ASIA
Teguar Taiwan Ltd.
Rm. A, 28F-12., No.99, Sec. 1, Xintai 5th Rd.,
Xizhi Dist., New Taipei City 221, Taiwan (R.O.C.)
+886 2 7751 5319
sales@teguar.com.tw