TEGUAR

TP-3445-12

12" Industrial Panel PC



Key Highlights

- 12.1" Touchscreen & IP66 Front Bezel
- Intel Apollo Lake N4200 Quad Core CPU
- Rugged Die-cast Aluminum Housing
- Optional Power over Ethernet
- Optional High Bright & Optical Bonding

VIEW ONLINE

The TP-3445-12 Industrial Panel PC is built with die-cast aluminum and has an IP66 rated front bezel. It runs on the Intel Apollo Lake Quad Core CPU has various configuration options, so you can create the perfect solution for your manufacturing plant or assembly line. Choose from several different expansion boards to add Mini-PCIe, SIM, USB or COM. This computer also supports Power over Ethernet, an optional internal backup battery, Pcap or resistive touch, and a high bright LCD. The TP-3445-12 is built to last, even in harsh manufacturing environments, and we're committed to supporting and selling this until at least 2030.

USA
Teguar
2920 Whitehall Park Drive
Charlotte, NC 28273
+1 866-693-3105
sales@teguar.com

EUROPE
Teguar Europe AG
Churerstrasse 54, CH-8808
Pfäffikon, Switzerland
+41 41 561 53 11
sales.EU@teguar.com

ASIA
Teguar Taiwan Ltd.
Rm. A, 28F-12., No.99, Sec. 1, Xintai 5th Rd.,
Xizhi Dist., New Taipei City 221, Taiwan (R.O.C.)
+886 2 7751 5319
sales@teguar.com.tw

Technical Specifications

Primary Components

Processor Family	Intel Pentium Apollo Lake
Processor Model	N4200
Processor Speed	1.10 GHz
Memory Type	Onboard DDR3
Memory Support	4GB, 8GB
Storage Type	1x 2.5" SATA Drive Bay for SSD/HDD
Storage Support	32GB-1TB

Power

Input Voltage Range	9-36V DC
Standard Power Adapter	Optional 12V AC/DC Adapter

Battery

Battery Type	Optional Internal Battery

Operating Systems

Windows	Windows 10 IoT, Windows 10 Pro
Linux	Linux (Contact your sales rep for more information)

Thermal & Environmental

Operating Temperature	-20°C - 60°C (-4°F – 140°F)
Storage Temperature	-30°C - 70°C (-22°F – 158°F)
Cooling Solution	Passive – Fanless with Heatsink
Humidity Range	10% – 90% Non-condensing

Peripherals & Wireless Connectivity

WiFi	Optional WiFi
Bluetooth	Optional Bluetooth 4.0
Mobile Network 4G LTE	Optional 4G

Warranty

Warranty	Up to 5 Years

Specifications subject to change.

Display

Screen Size	12.1"
Screen Ratio	4:3
Brightness	450 nits, 500 nits, Optional 1000 nit High Brightness

Touch Screen

Touch Screen	Projected Capacitive, Resistive

External I/O Ports

USB	2x USB 3.0
Serial / Com	2x COM
Serial Protocol Detail	1x RS-232/422/485 DB-9, default RS-232(COM1), 1x RS-232 DB-9(COM2)
Ethernet / LAN	2x RJ45 GbE LAN
Video Outputs	1x HDMI
Other Ports	1x 2-Pin DC Power Switch Connector
Audio Ports	1x Audio Line-Out
Power Input Port	3-Pin DC-In (Phoenix Type), Optional POE+, 30W with 2x USB 2.0

Expansion Slots

SD card	1x Micro SD Slot

Enclosure

Material	Aluminum
IP Rating	IP66 Front Bezel
Mounting Options	Panel Mount, VESA 100 Mount

Weight / Dimensions

Weight	2.8 kg (6.2 lbs)
Dimensions	319 x 245 x 52 mm (12.6 x 9.6 x 2.0 in)

Certification

Certifications	CE, FCC Class A, UL 60950, UL 62368

USA
Teguar
2920 Whitehall Park Drive
Charlotte, NC 28273
+1 866-693-3105
sales@teguar.com

EUROPE
Teguar Europe AG
Churerstrasse 54, CH-8808
Pfäffikon, Switzerland
+41 41 561 53 11
sales.EU@teguar.com

ASIA
Teguar Taiwan Ltd.
Rm. A, 28F-12., No.99, Sec. 1, Xintai 5th Rd.,
Xizhi Dist., New Taipei City 221, Taiwan (R.O.C.)
+886 2 7751 5319
sales@teguar.com.tw

I/O Diagram Images

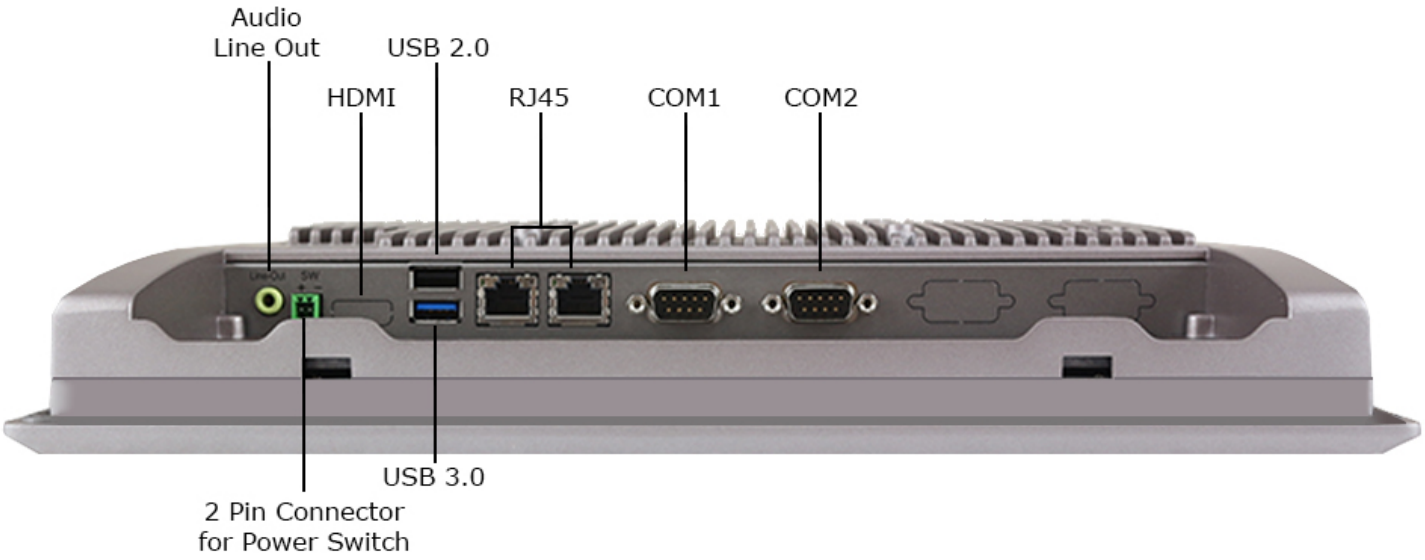

USA
Teguar
2920 Whitehall Park Drive
Charlotte, NC 28273
+1 866-693-3105
sales@teguar.com

EUROPE
Teguar Europe AG
Churerstrasse 54, CH-8808
Pfäffikon, Switzerland
+41 41 561 53 11
sales.EU@teguar.com

ASIA
Teguar Taiwan Ltd.
Rm. A, 28F-12., No.99, Sec. 1, Xintai 5th Rd.,
Xizhi Dist., New Taipei City 221, Taiwan (R.O.C.)
+886 2 7751 5319
sales@teguar.com.tw

Tech Diagram Images

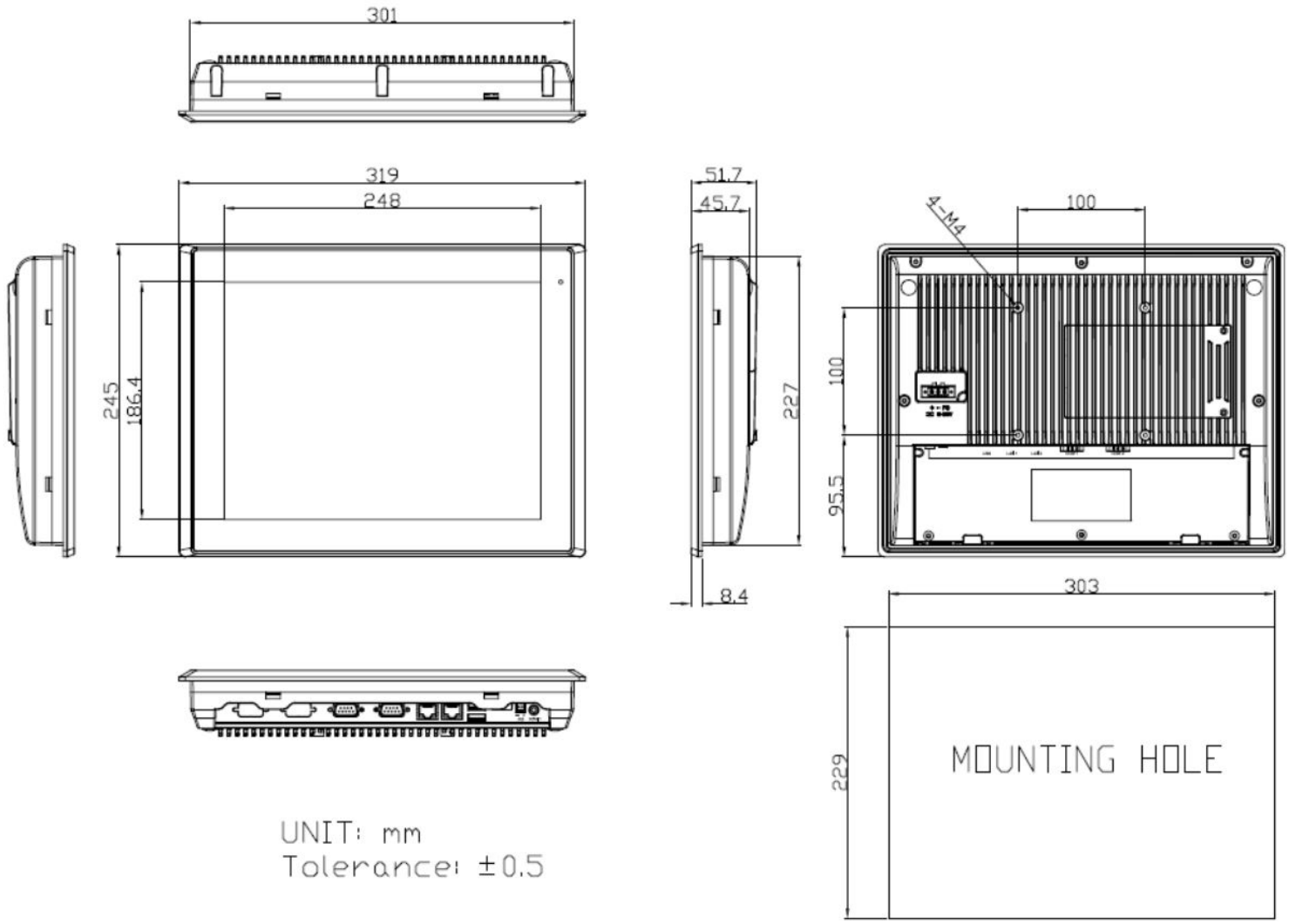

USA
Teguar
2920 Whitehall Park Drive
Charlotte, NC 28273
+1 866-693-3105
sales@teguar.com

EUROPE
Teguar Europe AG
Churerstrasse 54, CH-8808
Pfäffikon, Switzerland
+41 41 561 53 11
sales.EU@teguar.com

ASIA
Teguar Taiwan Ltd.
Rm. A, 28F-12., No.99, Sec. 1, Xintai 5th Rd.,
Xizhi Dist., New Taipei City 221, Taiwan (R.O.C.)
+886 2 7751 5319
sales@teguar.com.tw