TEGUAR

TS-5610-15

15" Stainless Steel Core i Computer



Key Highlights

- 15" 4:3 Ratio Touchscreen
- 8th Gen Intel Core Whiskey Lake i3/i5/i7 CPU
- Full IP66 and IP69K with Optional IP67
- Flat Wireless WiFi/BT Antenna
- Optional Speakers and Barcode Reader (MOQ)
- Supports Intel Vpro Technology

VIEW ONLINE

The TS-5610 Stainless Steel Core i Series is the latest in a long line of strong and dependable waterproof computers. While the TS-5610-15 may be the smallest offering in the Stainless Steel Core i series, it's no less powerful than the other three sizes available. In fact, the TS-5610-15 may in fact be the best value of the four, since it manages to pack so much computational power into the smallest size. The 4:3 ratio display comes equipped with either P-cap or resistive touchscreen capabilities and, as the name suggests, the 4.1 GHz processor is a Core i Series, with options for i3, i5, or i7 available. With the inclusion of an 8th Gen Intel CPU, the TS-5610-15 is Windows 11 compatible.

USA
Teguar
2920 Whitehall Park Drive
Charlotte, NC 28273
+1 866-693-3105
sales@teguar.com

EUROPE
Teguar Europe AG
Churerstrasse 54, CH-8808
Pfäffikon, Switzerland
+41 41 561 53 11
sales.EU@teguar.com

ASIA
Teguar Taiwan Ltd.
Rm. A, 28F-12., No.99, Sec. 1, Xintai 5th Rd.,
Xizhi Dist., New Taipei City 221, Taiwan (R.O.C.)
+886 2 7751 5319
sales@teguar.com.tw

Technical Specifications

Primary Components

Processor Family	Intel Core I series 8th Generation Whiskey Lake-U
Processor Model	Core i5-8365UE
Processor Speed	Up to 4.1 GHz
Memory Type	2x DDR4 SO-DIMM
Memory Support	4GB, 8GB, 16GB, 32GB
Storage Type	1x 2.5" SATA Drive Bay for SSD/HDD
Storage Support	32GB-1TB

External I/O Ports

USB	2x M12 8Pin for USB 1/2 and USB 3/4
Serial / Com	2x M12 8-pin for COM
Serial Protocol Detail	RS-232/422/485
Ethernet / LAN	1x M12 8pin RJ45 Gbe LAN
Power Input Port	M12 type 5-PIN DC-in

Compatibility

Security Hardware	Optional TPM 2.0, Supports Intel Vpro

Thermal & Environmental

Storage Temperature	-20°C ~ 60°C (-4°F – 140°F)
Cooling Solution	Passive – Fanless
Humidity Range	10% – 90% Non-condensing
Storage Humidity	10% – 90% Non-condensing

Peripherals & Wireless Connectivity

WiFi	Optional Wi-Fi 802.11 a/b/g/n/ac
Bluetooth	Optional Bluetooth 5.1
Barcode Scanner	Optional 1D/2D Barcode Scanner

Certification

Certifications	CE, FCC, VCCI Class B

Display

Screen Size	15"
Resolution	1024 x 768 (XGA)
Screen Ratio	4:3
Brightness	450 nits

Touch Screen

Touch Screen	5 Wire Resistive, Projected Capacitive
Hardness	Resistive: 3H, P-cap: 7H

Power

Input Voltage Range	19-28V DC
Max Power Consumption	83.9W
Standard Power Adapter	AC 100 ~ 277V / 47 ~ 63 Hz / DC output 24V, 5A, 120W, IP68

Operating Systems

Windows	Windows 10 IoT, Windows 10 Pro, Windows 11

Expansion Slots

Internal M.2	1x M.2 for NVME SSD Support

Enclosure

Material	SUS304 Stainless Steel
IP Rating	IP66, IP69K, NEMA 4X
Color	Stainless Steel
Control Buttons	Power Button
Mounting Options	VESA 100 Mount, Wall Mount

Weight / Dimensions

Weight	8.4 KG kg (18.5 lbs)
Dimensions	395 x 309.5 x 58 mm (15.6 x 12.2 x 2.3 in)

Warranty

Warranty	Up to 5 Years

Specifications subject to change.

USA
Teguar
2920 Whitehall Park Drive
Charlotte, NC 28273
+1 866-693-3105
sales@teguar.com

EUROPE
Teguar Europe AG
Churerstrasse 54, CH-8808
Pfäffikon, Switzerland
+41 41 561 53 11
sales.EU@teguar.com

ASIA
Teguar Taiwan Ltd.
Rm. A, 28F-12., No.99, Sec. 1, Xintai 5th Rd.,
Xizhi Dist., New Taipei City 221, Taiwan (R.O.C.)
+886 2 7751 5319
sales@teguar.com.tw

I/O Diagram Images

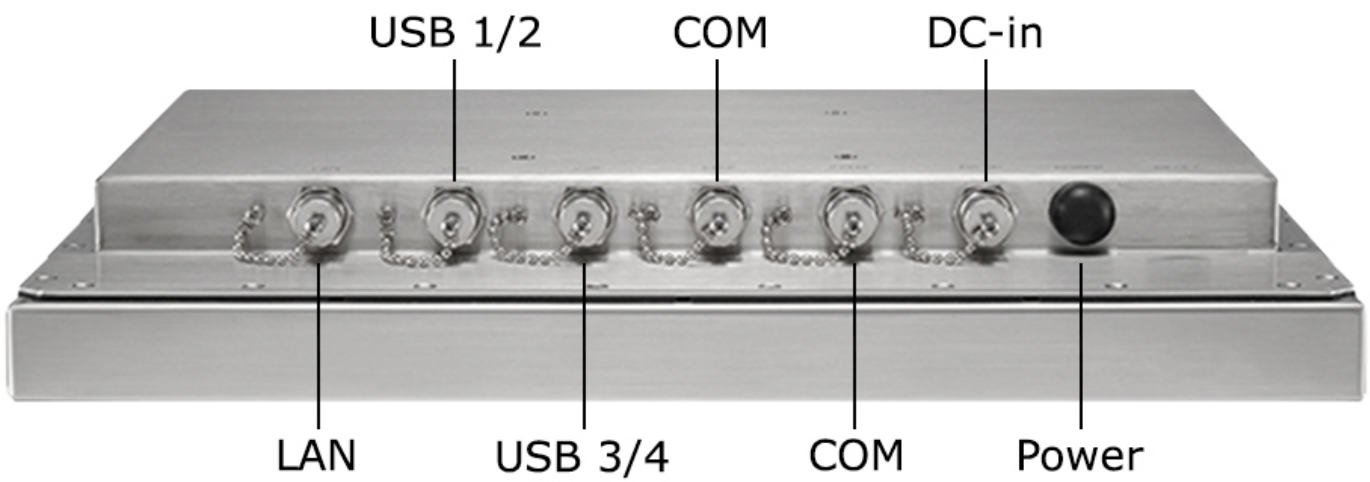

USA
Teguar
2920 Whitehall Park Drive
Charlotte, NC 28273
+1 866-693-3105
sales@teguar.com

EUROPE
Teguar Europe AG
Churerstrasse 54, CH-8808
Pfäffikon, Switzerland
+41 41 561 53 11
sales.EU@teguar.com

ASIA
Teguar Taiwan Ltd.
Rm. A, 28F-12., No.99, Sec. 1, Xintai 5th Rd.,
Xizhi Dist., New Taipei City 221, Taiwan (R.O.C.)
+886 2 7751 5319
sales@teguar.com.tw

Tech Diagram Images

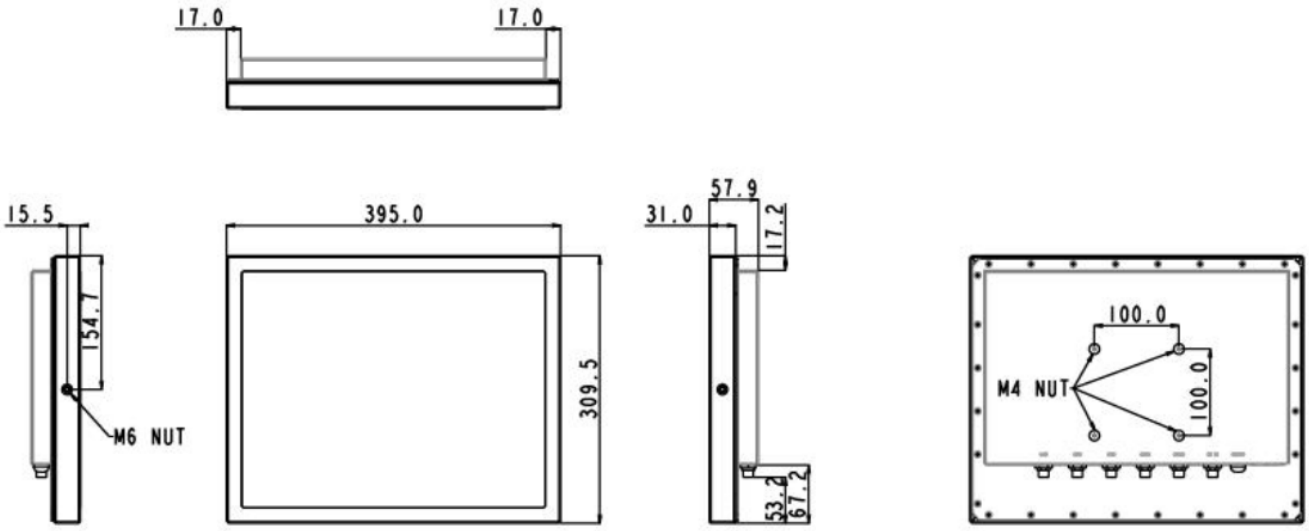

USA
Teguar
2920 Whitehall Park Drive
Charlotte, NC 28273
+1 866-693-3105
sales@teguar.com

EUROPE
Teguar Europe AG
Churerstrasse 54, CH-8808
Pfäffikon, Switzerland
+41 41 561 53 11
sales.EU@teguar.com

ASIA
Teguar Taiwan Ltd.
Rm. A, 28F-12., No.99, Sec. 1, Xintai 5th Rd.,
Xizhi Dist., New Taipei City 221, Taiwan (R.O.C.)
+886 2 7751 5319
sales@teguar.com.tw