TEGUAR

TA-4840-12

12" Fanless All in One PC

Key Highlights

- 11.6" LED with PCAP Touchscreen
- Intel Celeron J6412 Quad-Core CPU
- Slim, Durable Housing with Small Form Factor
- USB Type C
- Customizable and Modular

VIEW ONLINE

The TA-4840-12 is a compact and customizable all-in-one computer designed for point-of-sale and kiosk systems. Featuring a 11.6" full HD display with a responsive PCAP touchscreen, this computer runs Windows 11 on an Intel Celeron J6412 Quad-Core CPU, making it a reliable and efficient option for a range of business needs. Additionally, it mounts on a variety of stands or arms thanks to its VESA mounting hole pattern. With support for up to two optional peripherals, such as a 3-track MSR Fingerprint Reader, RFID Reader, 2D Barcode Scanner, 5MP Camera with microphone, and Verifone VX820 or Ingenico payment terminals, this computer is highly versatile and customizable.

USA
Teguar
2920 Whitehall Park Drive
Charlotte, NC 28273
+1 866-693-3105
sales@teguar.com

EUROPE
Teguar Europe AG
Churerstrasse 54, CH-8808
Pfäffikon, Switzerland
+41 41 561 53 11
sales.EU@teguar.com

ASIA
Teguar Taiwan Ltd.
Rm. A, 28F-12., No.99, Sec. 1, Xintai 5th Rd.,
Xizhi Dist., New Taipei City 221, Taiwan (R.O.C.)
+886 2 7751 5319
sales@teguar.com.tw

Technical Specifications

Primary Components

Processor Family	Intel Celeron Elkhart Lake
Processor Model	Celeron J6412
Memory Type	1x DDR4 SO-DIMM
Memory Support	4GB, 8GB, 16GB
Storage Type	1x M.2 slot for SSD
Storage Support	M.2: 128GB-1TB

Power

Input Voltage Range	19V DC
Standard Power Adapter	65W AC/DC Adapter

Operating Systems

Windows	Windows 10 IoT, Windows 10 Pro, Windows 11 IoT, Windows 11 Pro
Linux	Linux (Contact your sales rep for more information)

Expansion Slots

Internal M.2	1x M.2 2230 Key E (for WiFi expansion option)
Expansion Module support	2 USB based expansion areas on Bezel

Thermal & Environmental

Operating Temperature	0°C - 35°C (32°F – 95°F)
Storage Temperature	-20°C - 60°C (-4°F – 140°F)
Cooling Solution	Passive – Fanless
Humidity Range	20% – 85% Non-condensing

Peripherals & Wireless Connectivity

WiFi	Optional through M.2 interface
Bluetooth	Optional Bluetooth 5.1
Barcode Scanner	Optional 1D/2D Barcode Scanner
RFID	Optional 13.56 NFC External Module
Peripheral Other	Contact Teguar is you have a customized external Module request

Warranty

Warranty	Up to 5 Years

Specifications subject to change.

Display

Screen Size	11.6"
Screen Ratio	16:9
Brightness	300 nits

Touch Screen

Touch Screen	Projected Capacitive (Multi-touch)

External I/O Ports

USB	2x USB 2.0, 2x USB 3.0, 2x USB 3.0 type C, 2x USB Type C (Data only)
Serial / Com	2x COM
Serial Protocol Detail	x2 RS-232 DB-9
Ethernet / LAN	1x RJ45 GbE LAN
Power Input Port	4-Pole DIN (latching)

Compatibility

Security Hardware	fTPM 2.0

Multimedia

Speakers	1x 3W Speaker
Camera	Optional Webcam

Enclosure

Material	Plastic
IP Rating	IP54 Front Bezel
Color	Black
Mounting Options	VESA 75 Mount

Weight / Dimensions

Weight	1.4 kg (3.1 lbs)
Dimensions	277 x 181 x 41 mm (10.9 x 7.1 x 1.6 in)

Certification

Certifications	CE, FCC

USA
Teguar
2920 Whitehall Park Drive
Charlotte, NC 28273
+1 866-693-3105
sales@teguar.com

EUROPE
Teguar Europe AG
Churerstrasse 54, CH-8808
Pfäffikon, Switzerland
+41 41 561 53 11
sales.EU@teguar.com

ASIA
Teguar Taiwan Ltd.
Rm. A, 28F-12., No.99, Sec. 1, Xintai 5th Rd.,
Xizhi Dist., New Taipei City 221, Taiwan (R.O.C.)
+886 2 7751 5319
sales@teguar.com.tw

I/O Diagram Images

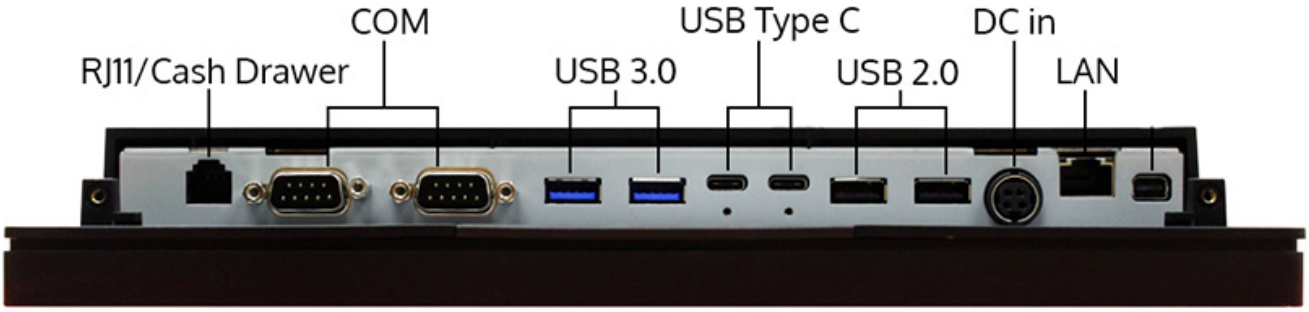

USA
Teguar
2920 Whitehall Park Drive
Charlotte, NC 28273
+1 866-693-3105
sales@teguar.com

EUROPE
Teguar Europe AG
Churerstrasse 54, CH-8808
Pfäffikon, Switzerland
+41 41 561 53 11
sales.EU@teguar.com

ASIA
Teguar Taiwan Ltd.
Rm. A, 28F-12., No.99, Sec. 1, Xintai 5th Rd.,
Xizhi Dist., New Taipei City 221, Taiwan (R.O.C.)
+886 2 7751 5319
sales@teguar.com.tw

Tech Diagram Images

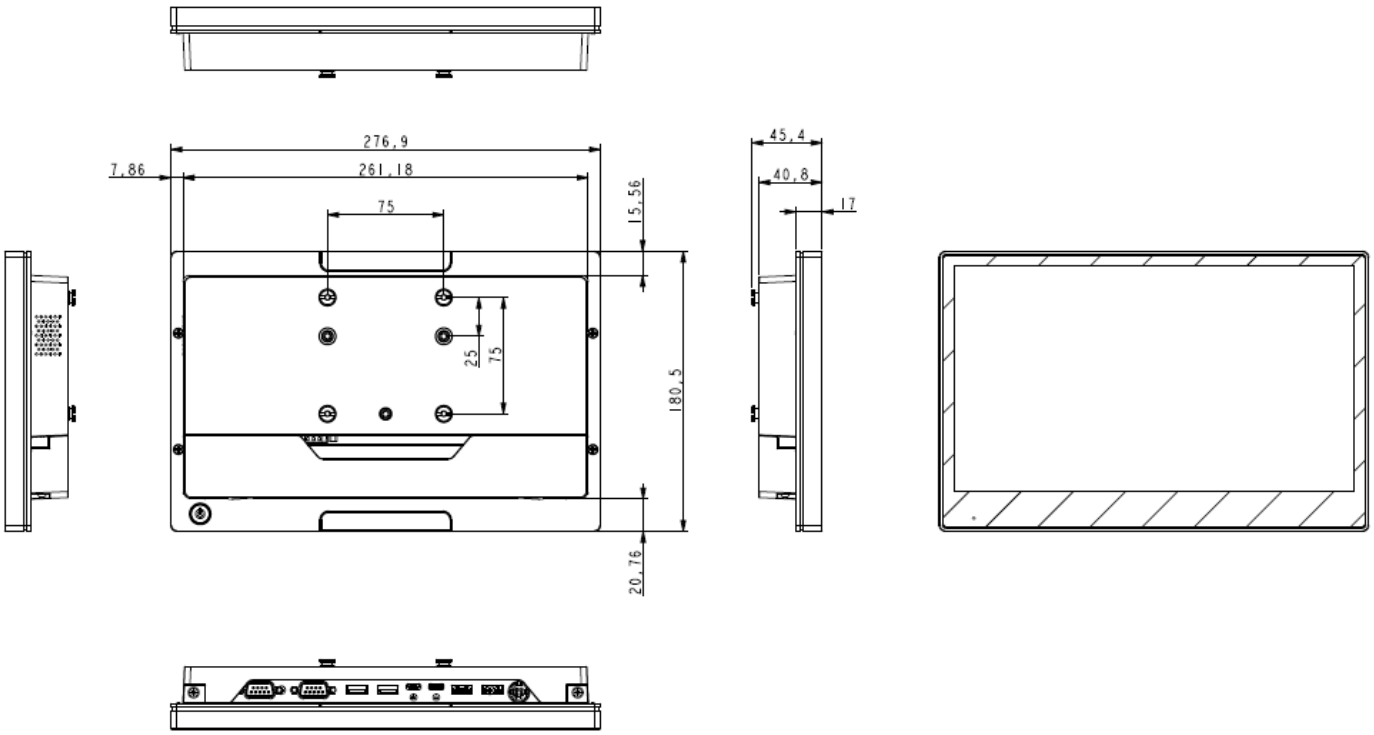

USA
Teguar
2920 Whitehall Park Drive
Charlotte, NC 28273
+1 866-693-3105
sales@teguar.com

EUROPE
Teguar Europe AG
Churerstrasse 54, CH-8808
Pfäffikon, Switzerland
+41 41 561 53 11
sales.EU@teguar.com

ASIA
Teguar Taiwan Ltd.
Rm. A, 28F-12., No.99, Sec. 1, Xintai 5th Rd.,
Xizhi Dist., New Taipei City 221, Taiwan (R.O.C.)
+886 2 7751 5319
sales@teguar.com.tw