TEGUAR

TM-4815-10

10" Medical Panel PC



Key Highlights

- 10" Projected Capacitive Touchscreen with Optical Bonding
- Intel Celeron N6210 Elkhart Lake CPU
- Multiple I/Os such as 1x HDMI, 1x RS-232, 1x GbE, 2x USB 3.2
- IP65 Rated

VIEW ONLINE

The 10" Medical Panel PC with Touch is a compact and versatile solution tailored to meet the specific needs of healthcare professionals. Its 10-inch optical bonding touchscreen offers intuitive and responsive interaction, enhancing workflow efficiency. With optional features like an RFID reader capable of reading various credentials, and Power over Ethernet (PoE) for simplified installation, it adapts seamlessly to diverse medical environments. Its flush wall-mount design saves space while ensuring easy access to critical data. Whether used for patient records, patient vitals, or part of a medical system, this panel PC delivers reliability and performance crucial for modern healthcare.

USA
Teguar
2920 Whitehall Park Drive
Charlotte, NC 28273
+1 866-693-3105
sales@teguar.com

EUROPE
Teguar Europe AG
Churerstrasse 54, CH-8808
Pfäffikon, Switzerland
+41 41 561 53 11
sales.EU@teguar.com

ASIA
Teguar Taiwan Ltd.
Rm. A, 28F-12., No.99, Sec. 1, Xintai 5th Rd.,
Xizhi Dist., New Taipei City 221, Taiwan (R.O.C.)
+886 2 7751 5319
sales@teguar.com.tw

Technical Specifications

Primary Components

Processor Family	Intel Celeron Elkhart Lake
Processor Model	Celeron N6210
Processor Speed	1.2 GHz, Up to 2.6 GHz
Memory Type	1x DDR4 SO-DIMM
Memory Support	4GB, 8GB, 16GB, 32GB
Storage Type	1x M.2 2242 Slot, SATA3 or NVMe
Storage Support	M.2: 128GB-512GB

Power

Input Voltage Range	12V DC, Optional POE with PD
Standard Power Adapter	External Medical Grade, 65W, 12Vdc, 5.42A, with US Power Cord

Operating Systems

Windows	Windows 10 IoT, Windows 10 Pro, Windows 11 IoT, Windows 11 Pro

Multimedia

Speakers	2x 1W Speakers
Microphone	Built-in Microphone

Enclosure

Material	PC+ABS
IP Rating	IP65 Front Bezel
Color	White
Control Buttons	AT/ATX, Clear CMOS, Power Button, Reset Button
Mounting Options	VESA 75 Mount

Weight / Dimensions

Weight	2.8 kg (6.2 lbs)
Dimensions	261 x 40 x 196.4 mm (10.3 x 1.6 x 7.7 in)

Warranty

Warranty	Up to 2 Years

Specifications subject to change.

Display

Screen Size	10.1"
Screen Ratio	5:04
Brightness	400 nits

Touch Screen

Touch Screen	Optically Bonded Projected Capacitive
Hardness	6H

External I/O Ports

USB	2x USB 3.2
Serial / Com	1x COM
Serial Protocol Detail	RS-232
Ethernet / LAN	1x Optional Gbe LAN PD POE Class 4 802.3at/Class 5 802.3.bt, 1x RJ45 GbE LAN
Video Outputs	1x HDMI
Audio Ports	1x 3.5mm Audio Line-Out/Mic-In
Power Input Port	DC-in via adapter cable

Thermal & Environmental

Operating Temperature	0°C - 40°C (32°F – 104°F)
Storage Temperature	-20°C - 60°C (-4°F – 140°F)
Cooling Solution	Passive – Fanless
Humidity Range	10% – 95% Non-condensing

Peripherals & Wireless Connectivity

WiFi	Intel® Wi-Fi 6E AX210
Bluetooth	Bluetooth 5.0

Certification

Certifications	CE, UL 62368

USA
Teguar
2920 Whitehall Park Drive
Charlotte, NC 28273
+1 866-693-3105
sales@teguar.com

EUROPE
Teguar Europe AG
Churerstrasse 54, CH-8808
Pfäffikon, Switzerland
+41 41 561 53 11
sales.EU@teguar.com

ASIA
Teguar Taiwan Ltd.
Rm. A, 28F-12., No.99, Sec. 1, Xintai 5th Rd.,
Xizhi Dist., New Taipei City 221, Taiwan (R.O.C.)
+886 2 7751 5319
sales@teguar.com.tw

I/O Diagram Images

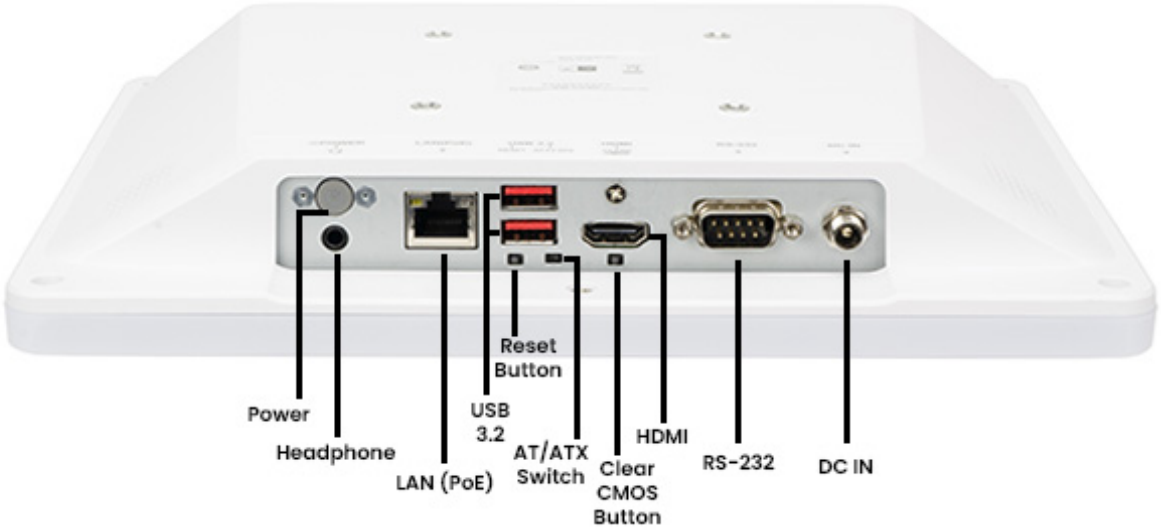

USA
Teguar
2920 Whitehall Park Drive
Charlotte, NC 28273
+1 866-693-3105
sales@teguar.com

EUROPE
Teguar Europe AG
Churerstrasse 54, CH-8808
Pfäffikon, Switzerland
+41 41 561 53 11
sales.EU@teguar.com

ASIA
Teguar Taiwan Ltd.
Rm. A, 28F-12., No.99, Sec. 1, Xintai 5th Rd.,
Xizhi Dist., New Taipei City 221, Taiwan (R.O.C.)
+886 2 7751 5319
sales@teguar.com.tw

Tech Diagram Images

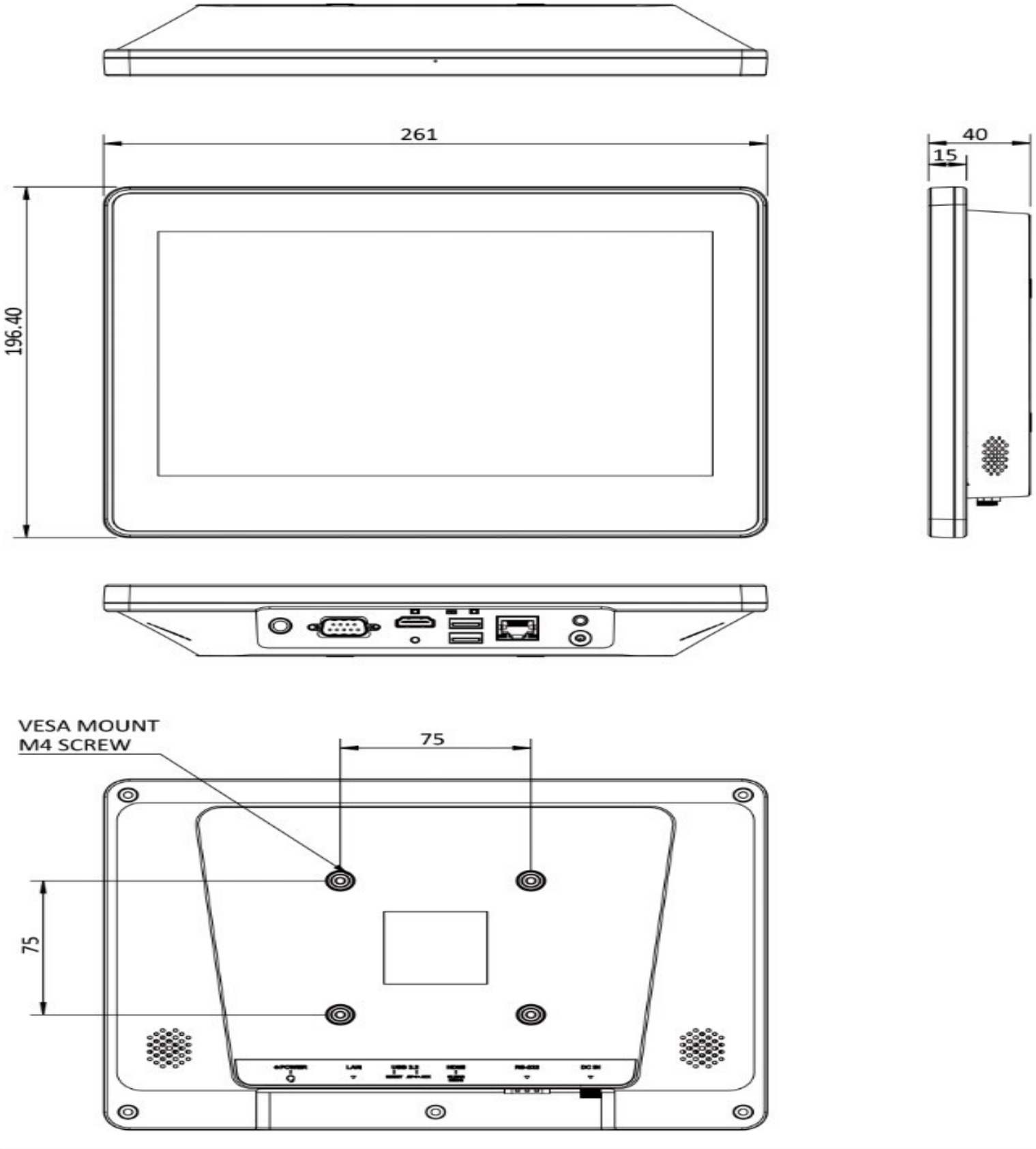

USA
Teguar
2920 Whitehall Park Drive
Charlotte, NC 28273
+1 866-693-3105
sales@teguar.com

EUROPE
Teguar Europe AG
Churerstrasse 54, CH-8808
Pfäffikon, Switzerland
+41 41 561 53 11
sales.EU@teguar.com

ASIA
Teguar Taiwan Ltd.
Rm. A, 28F-12., No.99, Sec. 1, Xintai 5th Rd.,
Xizhi Dist., New Taipei City 221, Taiwan (R.O.C.)
+886 2 7751 5319
sales@teguar.com.tw