TEGUAR

# HORIZON TM-6140-22I

22" Fanless All in One PC | Horizon

## Key Highlights

- 21.5" PCAP Touch Display
- 12th Generation Alder Lake-N processor
- Tough form factor for rugged operation
- Options for POE and wide input DC power
- Option to upgrade to Core i3
- Durable Flat Wi-Fi Antenna Kit

VIEW ONLINE

The 22" Fanless All in One PC offers modern advancements tailored for rugged application. Designed for seamless integration into industrial workflows, it serves as a versatile solution for operations terminals and data management. With a focus on durability that still maintains an elegant look, this PC ensures reliability and safety even in hazardous settings. The advanced 12th Gen Alder Lake-N processor from Intel® delivers exceptional performance, enabling smooth and efficient operation. Featuring multiple inputs and outputs, the TM-6140-22i offers extensive connectivity options for enhanced versatility and productivity in any facility.

**USA**
Teguar
2920 Whitehall Park Drive
Charlotte, NC 28273
+1 866-693-3105
sales@teguar.com

**EUROPE**
Teguar Europe AG
Churerstrasse 54, CH-8808
Pfäffikon, Switzerland
+41 41 561 53 11
sales.EU@teguar.com

**ASIA**
Teguar Taiwan Ltd.
Rm. A, 28F-12., No.99, Sec. 1, Xintai 5th Rd.,
Xizhi Dist., New Taipei City 221, Taiwan (R.O.C.)
+886 2 7751 5319
sales@teguar.com.tw

# Technical Specifications

## Primary Components

| | |
|---|---|
| **Processor Family** | Intel Core I series 12th Generation Alder Lake |
| **Processor Model** | Core i3-N305, Intel Processor N97 |
| **Processor Speed** | Up to 3.6 GHz, Up to 3.8 GHz |
| **Memory Type** | 1x DDR4 SO-DIMM |
| **Memory Support** | 4GB, 8GB, 16GB |
| **Storage Support** | 128GB-1TB |

## External I/O Ports

| | |
|---|---|
| **USB** | 1x USB 3.0 type C, 2x USB 3.0, 4x USB 2.0 |
| **Serial / Com** | 3x RJ48 COM |
| **Serial Protocol Detail** | RS232 |
| **Ethernet / LAN** | 1x RJ45 GbE LAN |
| **Video Outputs** | 1x DisplayPort via USB-C Alt Mode |
| **Other Ports** | 1x RJ11 |
| **Power Input Port** | 4-Pole DIN (latching) |

## Multimedia

| | |
|---|---|
| **Speakers** | 1x 3W Speaker |
| **Camera** | Optional 5MP Webcam |

## Enclosure

| | |
|---|---|
| **Material** | Aluminum |
| **IP Rating** | IP54 Front Bezel |
| **Color** | Black Touch w/ Silver Border and Black Rear (Default) or White Rear (Optional) |
| **Led Indicator Light** | Power |
| **Control Buttons** | Power Button, Power Switch |
| **Mounting Options** | VESA Mount |

## Certification

| | |
|---|---|
| **Certifications** | CE, FCC |

## Warranty

| | |
|---|---|
| **Warranty** | Up to 5 Years |

## Display

| | |
|---|---|
| **Screen Size** | 21.5" |
| **Resolution** | 1920 x 1080 (Full HD) |
| **Screen Ratio** | 16:9 |
| **Brightness** | 250 nits |

## Touch Screen

| | |
|---|---|
| **Touch Screen** | Projected Capacitive (Multi-touch) |

## Power

| | |
|---|---|
| **Input Voltage Range** | 12-48V DC |
| **Standard Power Adapter** | External 19V/3.42A 65W DC Power Adapter (120W Adapter with Powered USB Option) |

## Operating Systems

| | |
|---|---|
| **Windows** | Windows 10 IoT, Windows 10 Pro, Windows 11 IoT, Windows 11 Pro |
| **Linux** | Linux |

## Expansion Slots

| | |
|---|---|
| **Internal M.2** | 1x M.2 2230 Key E (for WiFi expansion option), 1x M.2 for NVME SSD Support |
| **Expansion Module support** | 1x Expansion Board Slot with Options for POE, Wide Range Power, Isolated Serial & LAN and Powered USB |

## Thermal & Environmental

| | |
|---|---|
| **Operating Temperature** | 0°C - 40°C (32°F – 104°F) |
| **Storage Temperature** | -20°C - 60°C (-4°F – 140°F) |
| **Cooling Solution** | Passive |
| **Humidity Range** | 20% – 85% Non-condensing |

## Peripherals & Wireless Connectivity

| | |
|---|---|
| **WiFi** | Optional WiFi 6 (AX) |
| **Bluetooth** | Optional Bluetooth 5.2 |

## Weight / Dimensions

| | |
|---|---|
| **Weight** | 6 kg (13.2 lbs) |
| **Dimensions** | 521 x 325 x 47 mm (20.5 x 12.8 x 1.9 in) |

***Specifications subject to change.***


**USA**
**Teguar**
**2920 Whitehall Park Drive**
**Charlotte, NC 28273**
**+1 866-693-3105**
**sales@teguar.com**

**EUROPE**
**Teguar Europe AG**
**Churerstrasse 54, CH-8808**
**Pfäffikon, Switzerland**
**+41 41 561 53 11**
**sales.EU@teguar.com**

**ASIA**
**Teguar Taiwan Ltd.**
**Rm. A, 28F-12., No.99, Sec. 1, Xintai 5th Rd.,**
**Xizhi Dist., New Taipei City 221, Taiwan (R.O.C.)**
**+886 2 7751 5319**
**sales@teguar.com.tw**

## I/O Diagram Images

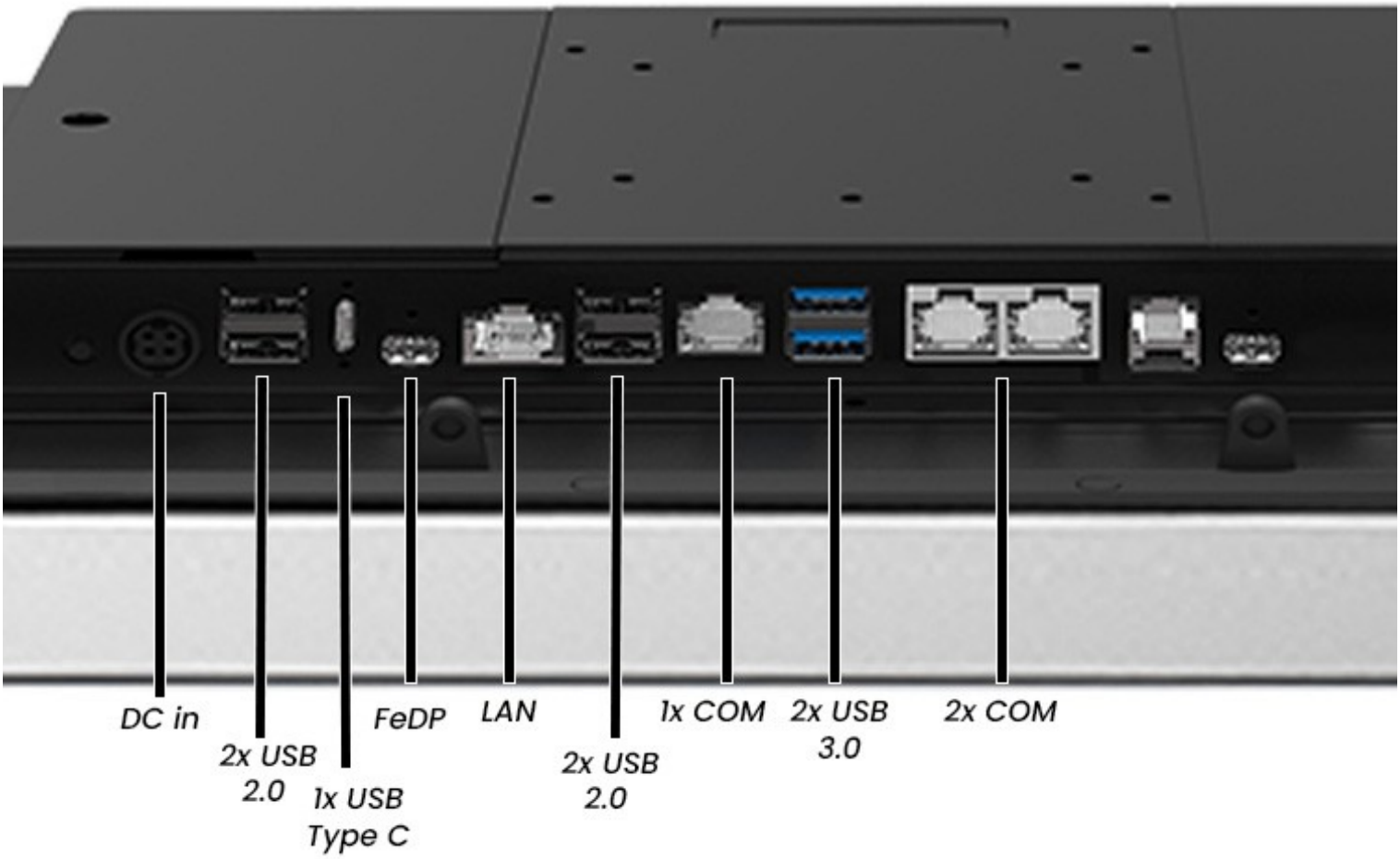


**USA**
Teguar
2920 Whitehall Park Drive
Charlotte, NC 28273
+1 866-693-3105
sales@teguar.com

**EUROPE**
Teguar Europe AG
Churerstrasse 54, CH-8808
Pfäffikon, Switzerland
+41 41 561 53 11
sales.EU@teguar.com

**ASIA**
Teguar Taiwan Ltd.
Rm. A, 28F-12., No.99, Sec. 1, Xintai 5th Rd.,
Xizhi Dist., New Taipei City 221, Taiwan (R.O.C.)
+886 2 7751 5319
sales@teguar.com.tw

# Tech Diagram Images

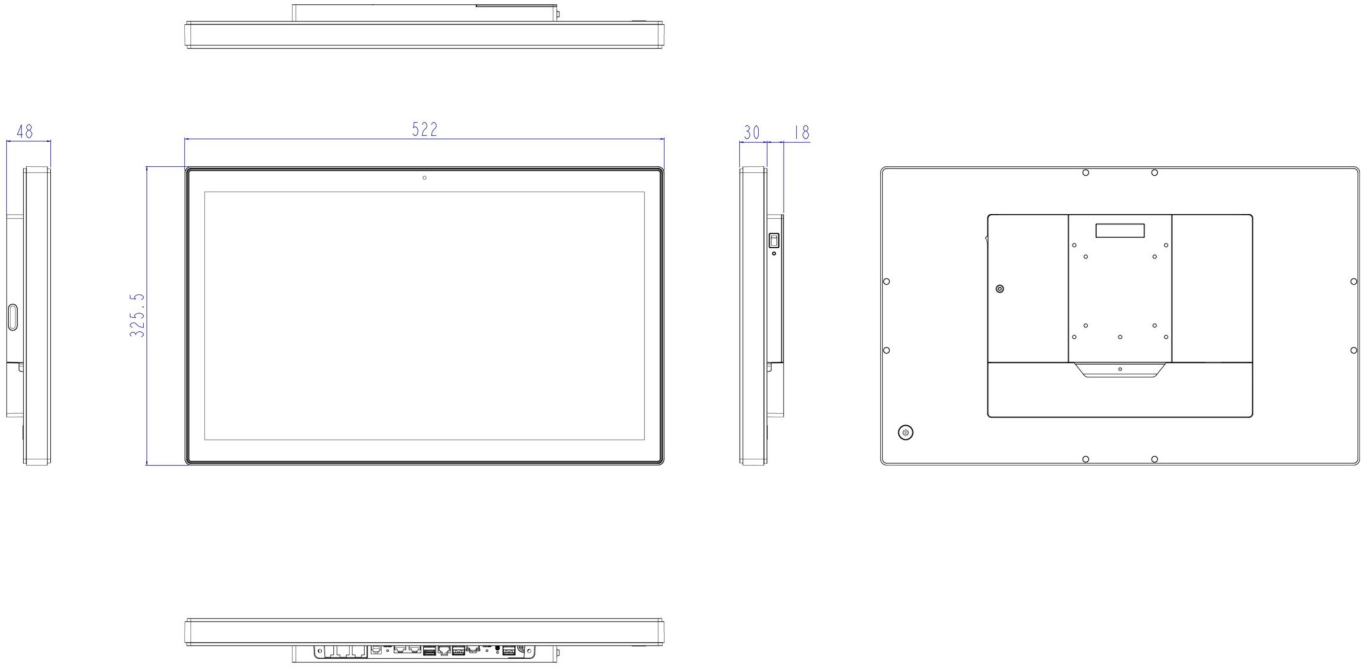



**USA**
Teguar
2920 Whitehall Park Drive
Charlotte, NC 28273
+1 866-693-3105
sales@teguar.com

**EUROPE**
Teguar Europe AG
Churerstrasse 54, CH-8808
Pfäffikon, Switzerland
+41 41 561 53 11
sales.EU@teguar.com

**ASIA**
Teguar Taiwan Ltd.
Rm. A, 28F-12., No.99, Sec. 1, Xintai 5th Rd.,
Xizhi Dist., New Taipei City 221, Taiwan (R.O.C.)
+886 2 7751 5319
sales@teguar.com.tw