TEGUAR

HORIZON TM-6140-18

18.5" Medical Touch Screen Computer



Key Highlights

- 18.5" PCAP Touch Display
- 12th Generation Alder Lake-N processor
- Designed for medical compliance
- Options for POE and wide input DC power
- Option to upgrade to Core i3
- Durable Flat Wi-Fi Antenna Kit

VIEW ONLINE

The 18.5" Medical Touch Screen Computer is engineered to meet stringent medical compliance standards while offering unparalleled versatility. Designed for seamless integration into medical workflows, it serves as a reliable solution for bedside terminals and electronic health record management. The powerful 12th Gen Alder Lake-N processor ensures efficient performance, enhancing productivity in healthcare environments. The modular, two-piece design not only simplifies repairs but also allows for future upgrades, ensuring longevity and adaptability to evolving technological needs. This terminal represents a forward-looking approach to healthcare computing, prioritizing reliability, efficiency, and flexibility.

USA
Teguar
2920 Whitehall Park Drive
Charlotte, NC 28273
+1 866-693-3105
sales@teguar.com

EUROPE
Teguar Europe AG
Churerstrasse 54, CH-8808
Pfäffikon, Switzerland
+41 41 561 53 11
sales.EU@teguar.com

ASIA
Teguar Taiwan Ltd.
Rm. A, 28F-12., No.99, Sec. 1, Xintai 5th Rd.,
Xizhi Dist., New Taipei City 221, Taiwan (R.O.C.)
+886 2 7751 5319
sales@teguar.com.tw

Technical Specifications

Primary Components

Processor Family	Intel Core I series 12th Generation Alder Lake
Processor Model	Core i3-N305, Intel Processor N97
Processor Speed	Up to 3.6 GHz, Up to 3.8 GHz
Memory Type	1x DDR4 SO-DIMM
Memory Support	4GB, 8GB, 16GB
Storage Support	128GB-1TB

External I/O Ports

USB	1x USB 3.0 type C, 2x USB 3.0, 4x USB 2.0
Serial / Com	3x RJ48 COM
Serial Protocol Detail	RS232
Ethernet / LAN	1x RJ45 GbE LAN
Video Outputs	1x DisplayPort via USB-C Alt Mode
Other Ports	1x RJ11
Power Input Port	4-Pole DIN (latching)

Multimedia

Speakers	1x 3W Speaker
Camera	Optional 5MP Webcam

Enclosure

Material	Aluminum
IP Rating	IP65 Front Bezel
Color	Black Touch w/ Silver Border and Black Rear (Default) or White Rear (Optional)
Led Indicator Light	Power
Control Buttons	Power Button, Power Switch
Mounting Options	VESA Mount

Certification

Certifications	CE, FCC

Warranty

Warranty	Up to 5 Years

Display

Screen Size	18.5"
Screen Resolution	1366 x 768
Screen Ratio	16:9
Brightness	450 nits

Touch Screen

Touch Screen	Projected Capacitive (Multi-touch)

Power

Input Voltage Range	12-48V DC
Standard Power Adapter	External 19V/3.42A 65W DC Power Adapter (120W Adapter with Powered USB Option)

Operating Systems

Windows	Windows 10 IoT, Windows 10 Pro, Windows 11 IoT, Windows 11 Pro
Linux	Linux

Expansion Slots

Internal M.2	1x M.2 2230 Key E (for WiFi expansion option), 1x M.2 for NVME SSD Support
Expansion Module support	1x Expansion Board Slot with Options for POE, Wide Range Power, Isolated Serial & LAN and Powered USB

Thermal & Environmental

Operating Temperature	0°C - 40°C (32°F – 104°F)
Storage Temperature	-20°C - 60°C (-4°F – 140°F)
Cooling Solution	Passive
Humidity Range	20% – 85% Non-condensing

Peripherals & Wireless Connectivity

WiFi	Optional WiFi 6 (AX)
Bluetooth	Optional Bluetooth 5.2

Weight / Dimensions

Weight	5 kg (11.0 lbs)
Dimensions	454 x 287 x 47 mm (17.9 x 11.3 x 1.9 in)

Specifications subject to change.

USA
Teguar
2920 Whitehall Park Drive
Charlotte, NC 28273
+1 866-693-3105
sales@teguar.com

EUROPE
Teguar Europe AG
Churerstrasse 54, CH-8808
Pfäffikon, Switzerland
+41 41 561 53 11
sales.EU@teguar.com

ASIA
Teguar Taiwan Ltd.
Rm. A, 28F-12., No.99, Sec. 1, Xintai 5th Rd.,
Xizhi Dist., New Taipei City 221, Taiwan (R.O.C.)
+886 2 7751 5319
sales@teguar.com.tw

I/O Diagram Images

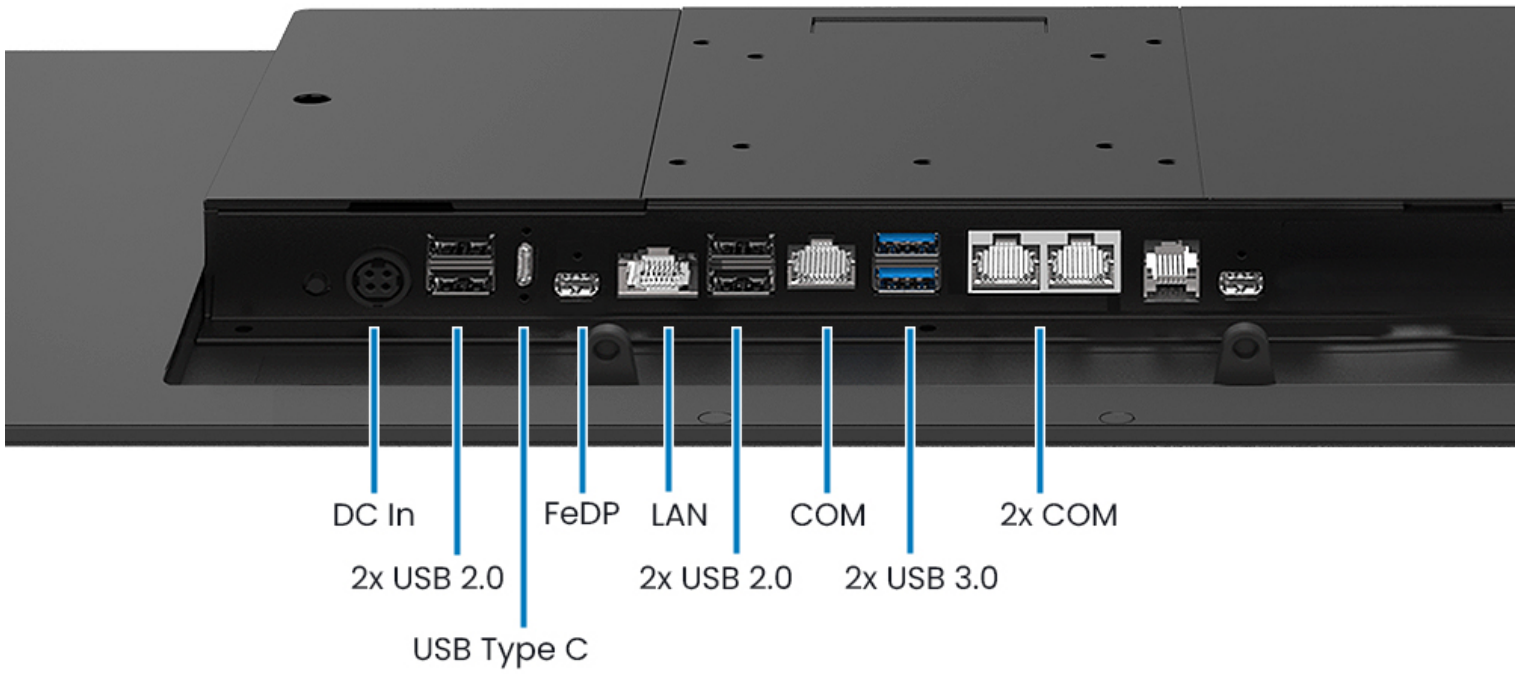

USA
Teguar
2920 Whitehall Park Drive
Charlotte, NC 28273
+1 866-693-3105
sales@teguar.com

EUROPE
Teguar Europe AG
Churerstrasse 54, CH-8808
Pfäffikon, Switzerland
+41 41 561 53 11
sales.EU@teguar.com

ASIA
Teguar Taiwan Ltd.
Rm. A, 28F-12., No.99, Sec. 1, Xintai 5th Rd.,
Xizhi Dist., New Taipei City 221, Taiwan (R.O.C.)
+886 2 7751 5319
sales@teguar.com.tw

Tech Diagram Images

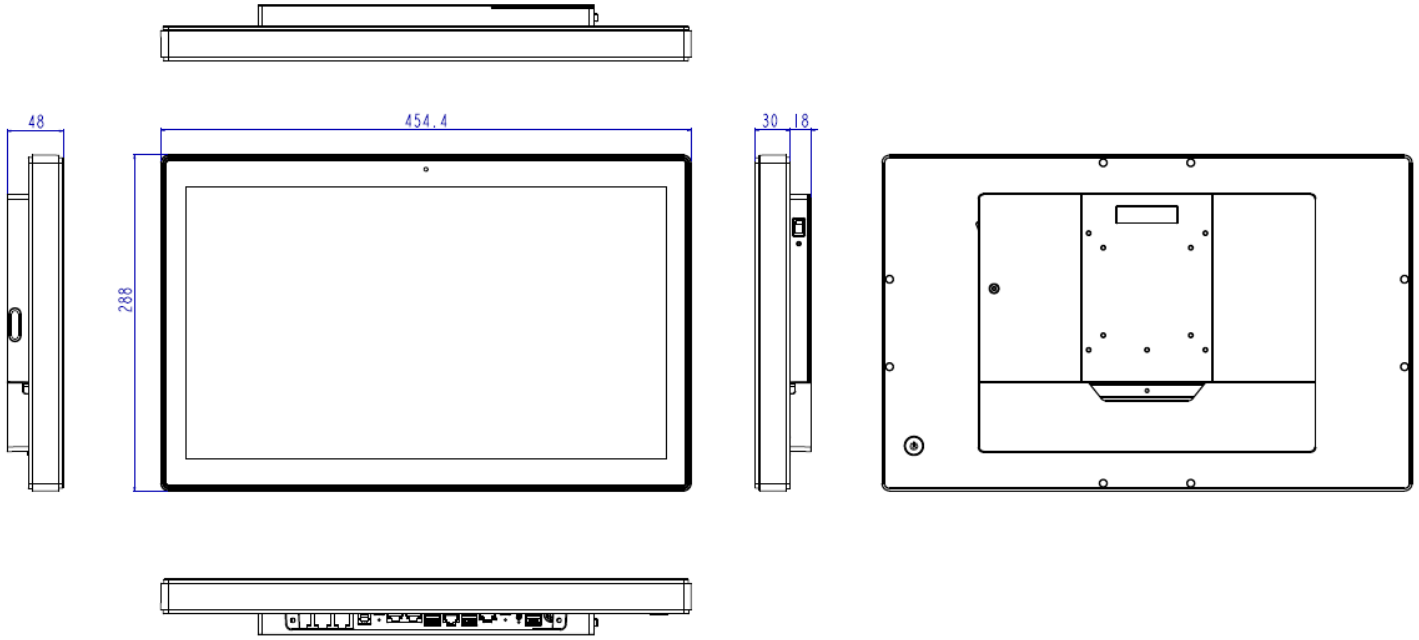

USA
Teguar
2920 Whitehall Park Drive
Charlotte, NC 28273
+1 866-693-3105
sales@teguar.com

EUROPE
Teguar Europe AG
Churerstrasse 54, CH-8808
Pfäffikon, Switzerland
+41 41 561 53 11
sales.EU@teguar.com

ASIA
Teguar Taiwan Ltd.
Rm. A, 28F-12., No.99, Sec. 1, Xintai 5th Rd.,
Xizhi Dist., New Taipei City 221, Taiwan (R.O.C.)
+886 2 7751 5319
sales@teguar.com.tw