TEGUAR

HORIZON TM-7240-16

16" Medical Touch Screen Computer | Horizon



Key Highlights

- 14th Generation Meteor Lake with built-in NPU
- UL-60601 Certified
- Ultra-fast DDR5
- Available configurations for dual LAN and PoE
- Rugged aluminum fanless build
- Expansions include 5MP camera and 2D scanner
- Durable Flat Wi-Fi Antenna Kit

VIEW ONLINE

The Horizon 15.6" Industrial Touch Screen Computer is powered by Intel® Core Ultra 5 Processor 125U, which brings 12 cores for strong multitasking and a built-in Neural Processing Unit. This NPU is your AI Accelerator for any machine vision and AI projects. Super-fast DDR5 RAM provides Horizon — and your team — with maximum efficiency. But the Horizon Series doesn't just eclipse the competition when it comes to performance. These elegant units are also slim in depth and have an innovative compact build, making them 2kg (4.4lbs) lighter than similar units.

USA
Teguar
2920 Whitehall Park Drive
Charlotte, NC 28273
+1 866-693-3105
sales@teguar.com

EUROPE
Teguar Europe AG
Churerstrasse 54, CH-8808
Pfäffikon, Switzerland
+41 41 561 53 11
sales.EU@teguar.com

ASIA
Teguar Taiwan Ltd.
Rm. A, 28F-12., No.99, Sec. 1, Xintai 5th Rd.,
Xizhi Dist., New Taipei City 221, Taiwan (R.O.C.)
+886 2 7751 5319
sales@teguar.com.tw

Technical Specifications

Primary Components

Processor Family	Intel Core Ultra Series 14th Generation Meteor Lake
Processor Model	Core Ultra 5 - 125U
Processor Speed	2x Low-Power Efficient Cores up to 2.1GHz, 2x Performance Cores up to 4.3GHz, 8x Efficient Cores up to 3.6GHz
Memory Type	1x DDR5 SO-DIMM
Memory Support	8GB, 16GB, 32GB
Storage Type	1x M.2 2280 SATA3/NVMe Slot
Storage Support	128GB-1TB

Power

Input Voltage Range	12-48V DC
Standard Power Adapter	External 19V/6.32A 120W DC Power Adapter

Operating Systems

Windows	Windows 10 IoT, Windows 11 IoT, Windows 11 Pro

Expansion Slots

Internal M.2	1x M.2 2230 Key E (for WiFi expansion option), 1x M.2 for NVME/SATA3 SSD Support
Expansion Module support	71W PoE Module/2nd LAN Module/Powered USB Module (2x 12V, 1x 24V)/Isolated LAN+DB9 Serial

Thermal & Environmental

Operating Temperature	0°C - 40°C (32°F – 104°F)
Storage Temperature	-20°C - 60°C (-4°F – 140°F)
Cooling Solution	Passive – Fanless with Heatsink
Humidity Range	25% – 85% Non-condensing

Peripherals & Wireless Connectivity

WiFi	WiFI 6E (Optional)
Bluetooth	Optional Bluetooth 5.2
Peripheral Other	Optional MSR

Certification

Certifications	CE, EN60601-1, FCC, UL60601-1 / EN60601-1

Specifications subject to change.

Display

Screen Size	15.6"
Screen Resolution	1920 x 1080 (Full HD)
Screen Ratio	16:9
Brightness	300 nits

Touch Screen

Touch Screen	Projected Capacitive (Multi-touch)

External I/O Ports

USB	1x USB 3.0 Type-C (Power/Video/Data), 2x USB 2.0, 4x USB 3.0
Serial / Com	3x RJ48 COM
Ethernet / LAN	1x RJ45 GbE LAN
Video Outputs	1x DisplayPort via USB-C Alt Mode

Compatibility

Security Hardware	fTPM 2.0

Multimedia

Speakers	1x Speaker
Camera	Optional 5MP Webcam
Microphone	With Optional 5MP Webcam

Enclosure

Material	Aluminum, Plastic
IP Rating	IP65 Front Bezel
Color	Black, White
Mounting Options	VESA Mount

Weight / Dimensions

Weight	3.5 kg (7.7 lbs)
Dimensions	388 x 249 x 47 mm (15.3 x 9.8 x 1.9 in)

Warranty

Warranty	Up to 5 Years

USA
Teguar
2920 Whitehall Park Drive
Charlotte, NC 28273
+1 866-693-3105
sales@teguar.com

EUROPE
Teguar Europe AG
Churerstrasse 54, CH-8808
Pfäffikon, Switzerland
+41 41 561 53 11
sales.EU@teguar.com

ASIA
Teguar Taiwan Ltd.
Rm. A, 28F-12., No.99, Sec. 1, Xintai 5th Rd.,
Xizhi Dist., New Taipei City 221, Taiwan (R.O.C.)
+886 2 7751 5319
sales@teguar.com.tw

I/O Diagram Images

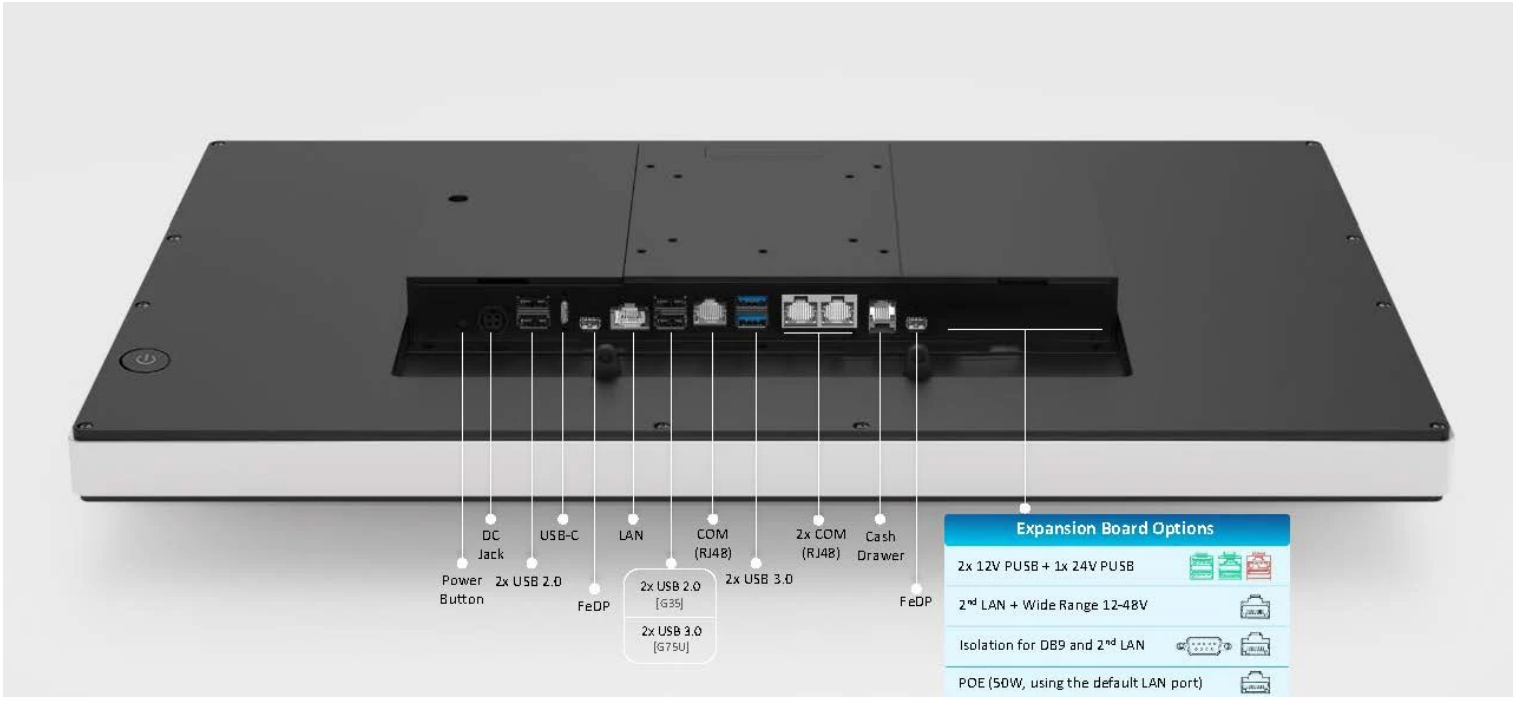

USA
Teguar
2920 Whitehall Park Drive
Charlotte, NC 28273
+1 866-693-3105
sales@teguar.com

EUROPE
Teguar Europe AG
Churerstrasse 54, CH-8808
Pfäffikon, Switzerland
+41 41 561 53 11
sales.EU@teguar.com

ASIA
Teguar Taiwan Ltd.
Rm. A, 28F-12., No.99, Sec. 1, Xintai 5th Rd.,
Xizhi Dist., New Taipei City 221, Taiwan (R.O.C.)
+886 2 7751 5319
sales@teguar.com.tw

Tech Diagram Images

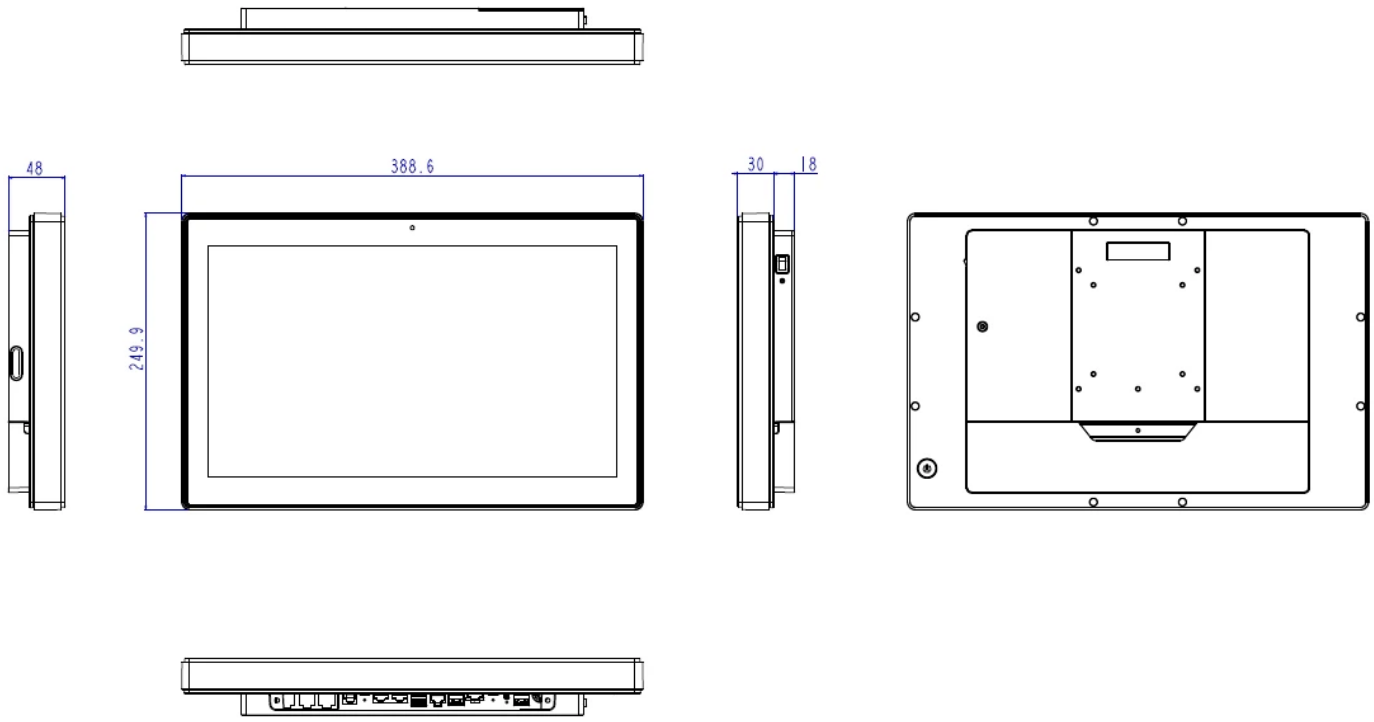

USA
Teguar
2920 Whitehall Park Drive
Charlotte, NC 28273
+1 866-693-3105
sales@teguar.com

EUROPE
Teguar Europe AG
Churerstrasse 54, CH-8808
Pfäffikon, Switzerland
+41 41 561 53 11
sales.EU@teguar.com

ASIA
Teguar Taiwan Ltd.
Rm. A, 28F-12., No.99, Sec. 1, Xintai 5th Rd.,
Xizhi Dist., New Taipei City 221, Taiwan (R.O.C.)
+886 2 7751 5319
sales@teguar.com.tw