TEGUAR

TP-5940-22

21.5" Fanless All-in-One PC



Key Highlights

- 21.5" True Flat IP65 Protected Touchscreen
- Intel Tiger Lake Core i5 CPU
- Fanless and low power consumption
- Aluminum Die-Cast Housing
- Multiple I/Os including 2x USB Type C, 2x USB 3.0, 2x USB 2.0, 1x LAN, 2x DB9

VIEW ONLINE

This industrial computer has a 21.5" widescreen P-cap touchscreen and runs on the powerful Intel Tiger Lake Core i5 CPU. The TP-5940-22 utilizes fanless cooling and is built with rugged aluminum housing. The front bezel of this computer is IP65 rated waterproof, so it can easily be sprayed and wiped down for cleaning. This PC has options for a webcam, Bluetooth, RFID and barcode reader, for seamless integration into your system. This reliable computer is designed for 24/7 operation in even the most demanding of work environments.

USA
Teguar
2920 Whitehall Park Drive
Charlotte, NC 28273
+1 866-693-3105
sales@teguar.com

EUROPE
Teguar Europe AG
Churerstrasse 54, CH-8808
Pfäffikon, Switzerland
+41 41 561 53 11
sales.EU@teguar.com

ASIA
Teguar Taiwan Ltd.
Rm. A, 28F-12., No.99, Sec. 1, Xintai 5th Rd.,
Xizhi Dist., New Taipei City 221, Taiwan (R.O.C.)
+886 2 7751 5319
sales@teguar.com.tw

Technical Specifications

Primary Components

Processor Family	Intel Core I series 11th Generation Tiger Lake
Processor Model	Core i5 1145G7
Processor Speed	2.6 GHz
Memory Type	1x DDR4 SO-DIMM
Memory Support	2GB, 4GB, 8GB, 16GB
Storage Type	1x M.2 slot for SSD
Storage Support	32GB-1TB

Power

Input Voltage Range	19V DC
Standard Power Adapter	120W

Operating Systems

Windows	Windows 10 IoT, Windows 10 Pro, Windows 11 IoT, Windows 11 Pro

Compatibility

Security Hardware	fTPM 2.0, Intel vPro Technology: Intel AMT Supported

Thermal & Environmental

Operating Temperature	0°C - 35°C (32°F – 95°F)
Storage Temperature	-20°C - 60°C (-4°F – 140°F)
Cooling Solution	Passive – Fanless
Humidity Range	20% – 85% Non-condensing

Peripherals & Wireless Connectivity

WiFi	Optional 802.11 b/g/n/ac
Bluetooth	Optional Bluetooth 5.1
Barcode Scanner	Optional 1D/2D Barcode Scanner
RFID	Optional RFID Module

Specifications subject to change.

Display

Screen Size	21.5"
Screen Resolution	1920 x 1080 (Full HD)
Screen Ratio	16:9
Brightness	250 nits

Touch Screen

Touch Screen	Projected Capacitive

External I/O Ports

USB	2x USB 2.0, 2x USB 3.0, 2x USB 3.0 type C
Ethernet / LAN	1x RJ45 GbE LAN
Other Ports	2x DB9 COM
Audio Ports	1x Audio Line-In, 1x Audio Line-Out
Power Input Port	4-Pole DIN (latching)

Multimedia

Speakers	2x 2W Speakers
Camera	2MP Webcam

Enclosure

Material	Aluminum
IP Rating	IP65 Front Bezel
Mounting Options	VESA 75 Mount

Weight / Dimensions

Weight	7.75 kg (17.1 lbs)
Dimensions	536 x 48 x 328 mm (21.1 x 1.9 x 12.9 in)

Warranty

Warranty	Up to 5 Years

USA
Teguar
2920 Whitehall Park Drive
Charlotte, NC 28273
+1 866-693-3105
sales@teguar.com

EUROPE
Teguar Europe AG
Churerstrasse 54, CH-8808
Pfäffikon, Switzerland
+41 41 561 53 11
sales.EU@teguar.com

ASIA
Teguar Taiwan Ltd.
Rm. A, 28F-12., No.99, Sec. 1, Xintai 5th Rd.,
Xizhi Dist., New Taipei City 221, Taiwan (R.O.C.)
+886 2 7751 5319
sales@teguar.com.tw

I/O Diagram Images

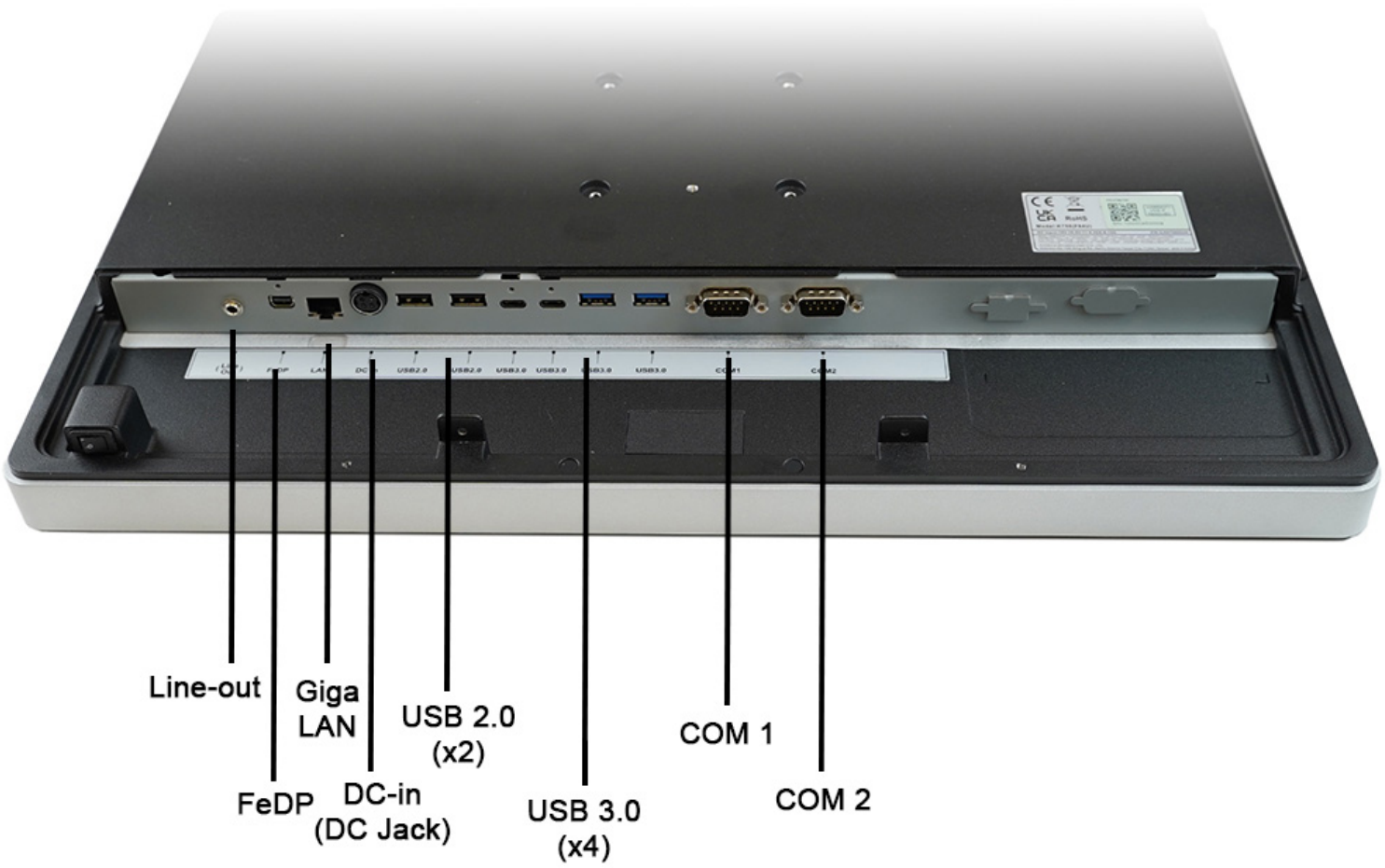

USA
Teguar
2920 Whitehall Park Drive
Charlotte, NC 28273
+1 866-693-3105
sales@teguar.com

EUROPE
Teguar Europe AG
Churerstrasse 54, CH-8808
Pfäffikon, Switzerland
+41 41 561 53 11
sales.EU@teguar.com

ASIA
Teguar Taiwan Ltd.
Rm. A, 28F-12., No.99, Sec. 1, Xintai 5th Rd.,
Xizhi Dist., New Taipei City 221, Taiwan (R.O.C.)
+886 2 7751 5319
sales@teguar.com.tw

Tech Diagram Images

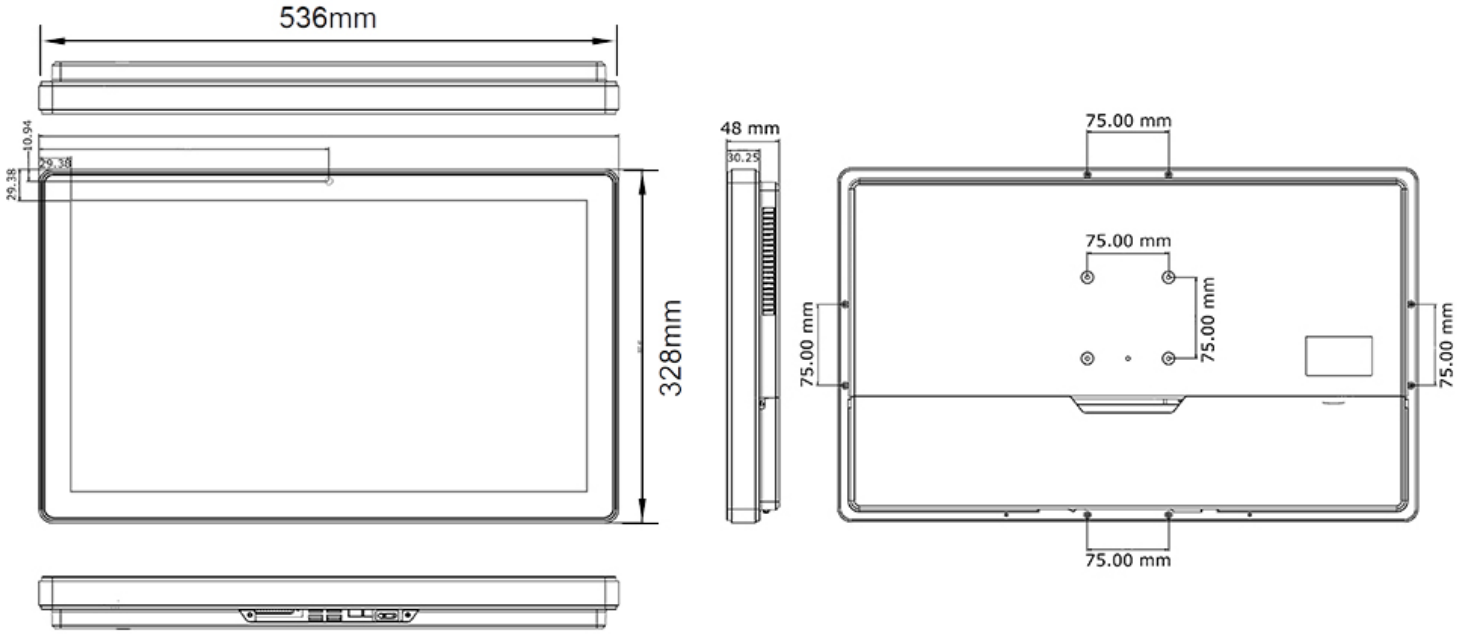

USA
Teguar
2920 Whitehall Park Drive
Charlotte, NC 28273
+1 866-693-3105
sales@teguar.com

EUROPE
Teguar Europe AG
Churerstrasse 54, CH-8808
Pfäffikon, Switzerland
+41 41 561 53 11
sales.EU@teguar.com

ASIA
Teguar Taiwan Ltd.
Rm. A, 28F-12., No.99, Sec. 1, Xintai 5th Rd.,
Xizhi Dist., New Taipei City 221, Taiwan (R.O.C.)
+886 2 7751 5319
sales@teguar.com.tw