TEGUAR

TP-A945-12

12.1" Android Industrial Panel PC



Key Highlights

- 12.1" Resistive or P-Cap Touch Screen Panel
- ARM Cortex A9 CPU
- Onboard DDR3 1GB Memory
- Onboard 4GB eMMC Flash
- IP65 Protected Front Bezel
- Wide Range Power Input

VIEW ONLINE

The TP-A945-12 Android Panel PC combines durability with the ability to easily integrate into your mobile environment. They are a great solution to replace your PLC or HMI windows-based touch panel PCs. At a lower price point using the proven android platform, the TP-A945-12 easily runs your IoT cloud-based applications. Rugged IP65 front rating ensures a high performing low-cost solution for your HMI applications such as meeting room signage, building automation, security, temperature control, and factory automation. The TP-A945 series include the Android 6.0 Marshmallow OS, which releases the full capabilities of the platform to developers.

USA
Teguar
2920 Whitehall Park Drive
Charlotte, NC 28273
+1 866-693-3105
sales@teguar.com

EUROPE
Teguar Europe AG
Churerstrasse 54, CH-8808
Pfäffikon, Switzerland
+41 41 561 53 11
sales.EU@teguar.com

ASIA
Teguar Taiwan Ltd.
Rm. A, 28F-12., No.99, Sec. 1, Xintai 5th Rd.,
Xizhi Dist., New Taipei City 221, Taiwan (R.O.C.)
+886 2 7751 5319
sales@teguar.com.tw

Technical Specifications

Primary Components

Processor Family	ARM Cortex A9
Processor Speed	1.0 GHz
Memory Type	Onboard DDR3
Memory Support	1GB
Storage Support	4GB

External I/O Ports

USB	1x Micro USB Port, 2x USB 2.0
Serial / Com	1x COM
Serial Protocol Detail	1x RS-232/422/485 DB-9
Ethernet / LAN	1x RJ45 GbE LAN
Power Input Port	3-Pin DC-In (Phoenix Type)

Expansion Slots

SD card	1x Micro SD Slot

Enclosure

Material	Plastic
IP Rating	IP65 Front Bezel
Mounting Options	Panel Mount, VESA Mount, Wall Mount

Peripherals & Wireless Connectivity

WiFi	Optional WiFi/3G Module (via mini-PCIe)
Sim Card	1x SIM Card Slot

Certification

Certifications	CE, FCC Class A

Specifications subject to change.

Display

Screen Size	12.1"
Screen Resolution	800 x 600 (SVGA)
Screen Ratio	4:3
Brightness	450 nits

Touch Screen

Touch Screen	Projected Capacitive, Resistive

Power

Input Voltage Range	9-36V DC
Standard Power Adapter	Optional 12V AC/DC Adapter

Operating Systems

Android	Android 6.0.1
Linux	Linux 4.1.15

Thermal & Environmental

Operating Temperature	0°C - 50°C (32°F – 122°F)
Storage Temperature	-20°C - 60°C (-4°F – 140°F)
Cooling Solution	Passive – Fanless with Heatsink
Humidity Range	10% – 90% Non-condensing

Weight / Dimensions

Weight	1.5 kg (3.3 lbs)
Dimensions	319 x 51 x 245 mm (12.6 x 2.0 x 9.6 in)

Warranty

Warranty	Up to 5 Years

USA
Teguar
2920 Whitehall Park Drive
Charlotte, NC 28273
+1 866-693-3105
sales@teguar.com

EUROPE
Teguar Europe AG
Churerstrasse 54, CH-8808
Pfäffikon, Switzerland
+41 41 561 53 11
sales.EU@teguar.com

ASIA
Teguar Taiwan Ltd.
Rm. A, 28F-12., No.99, Sec. 1, Xintai 5th Rd.,
Xizhi Dist., New Taipei City 221, Taiwan (R.O.C.)
+886 2 7751 5319
sales@teguar.com.tw

I/O Diagram Images



USA
Teguar
2920 Whitehall Park Drive
Charlotte, NC 28273
+1 866-693-3105
sales@teguar.com

EUROPE
Teguar Europe AG
Churerstrasse 54, CH-8808
Pfäffikon, Switzerland
+41 41 561 53 11
sales.EU@teguar.com

ASIA
Teguar Taiwan Ltd.
Rm. A, 28F-12., No.99, Sec. 1, Xintai 5th Rd.,
Xizhi Dist., New Taipei City 221, Taiwan (R.O.C.)
+886 2 7751 5319
sales@teguar.com.tw

Tech Diagram Images

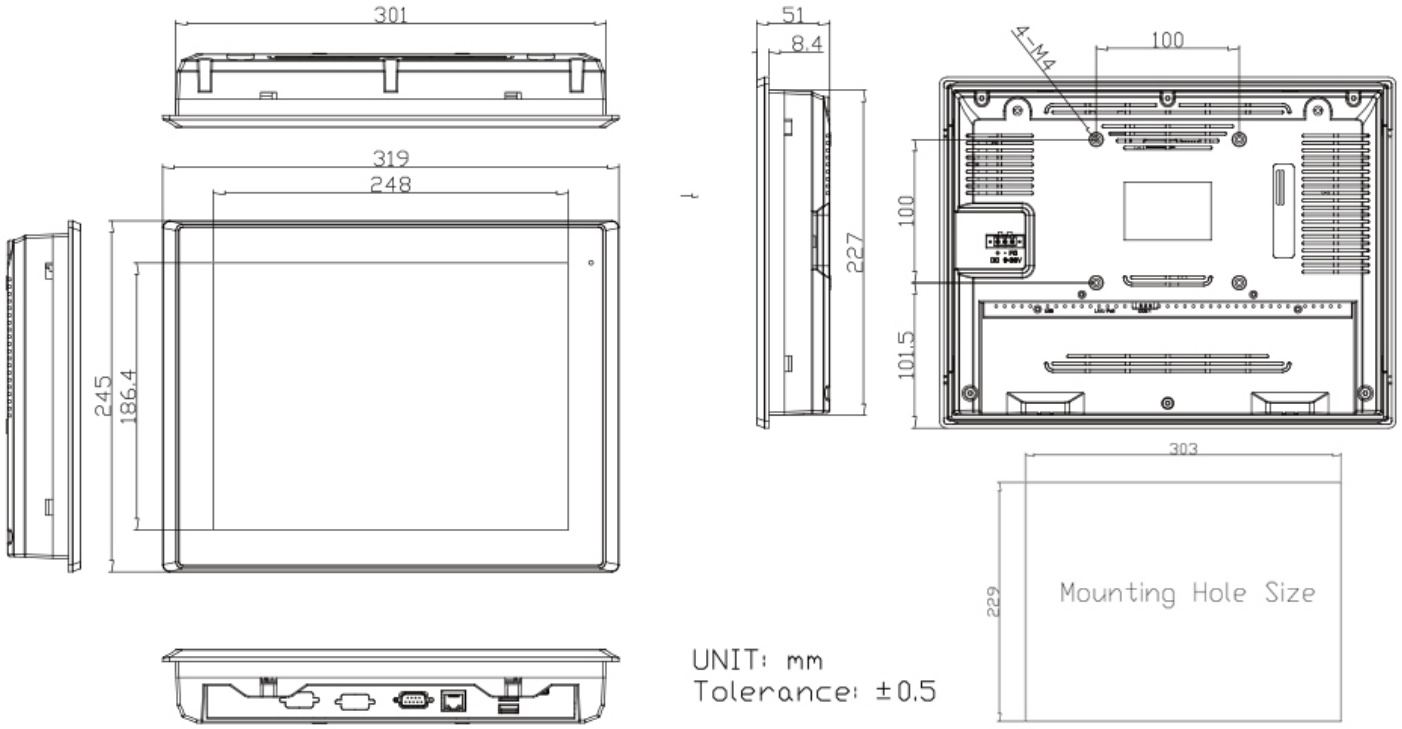

USA
Teguar
2920 Whitehall Park Drive
Charlotte, NC 28273
+1 866-693-3105
sales@teguar.com

EUROPE
Teguar Europe AG
Churerstrasse 54, CH-8808
Pfäffikon, Switzerland
+41 41 561 53 11
sales.EU@teguar.com

ASIA
Teguar Taiwan Ltd.
Rm. A, 28F-12., No.99, Sec. 1, Xintai 5th Rd.,
Xizhi Dist., New Taipei City 221, Taiwan (R.O.C.)
+886 2 7751 5319
sales@teguar.com.tw