TP-A945-10

10.1" Fanless Android Panel PC



Key Highlights

- 10.1" True Flat Panel Touch Screen Panel
- ARM Cortex A9 Processor
- IP65 Protected Front Bezel
- Fanless Design
- Onboard DDR3 1GB Memory
- Onboard 4GB eMMC Flash

VIEW ONLINE

Where cloud connectivity is used in a mobile device environment, these 10" android touch screen panel PCs are and ideal solutions. The TP-A945-10 enables you to easily connect to sensors and logging devices. With more processing power then a PLC and less expense than a windows-based PC, a TP-A945-10 hits the sweet spot of functionality and price. The rugged fanless design is IP65 front rated to endure factory floor and high traffic user demands.

USA
Teguar
2920 Whitehall Park Drive
Charlotte, NC 28273
+1 866-693-3105
sales@teguar.com

EUROPE
Teguar Europe AG
Churerstrasse 54, CH-8808
Pfäffikon, Switzerland
+41 41 561 53 11
sales.EU@teguar.com

ASIA
Teguar Taiwan Ltd.
Rm. A, 28F-12., No.99, Sec. 1, Xintai 5th Rd.,
Xizhi Dist., New Taipei City 221, Taiwan (R.O.C.)
+886 2 7751 5319
sales@teguar.com.tw

Technical Specifications

Primary Components

Processor Family	ARM Cortex A9
Processor Speed	1.0 GHz
Memory Type	Onboard DDR3
Memory Support	1GB
Storage Support	4GB

External I/O Ports

USB	1x Micro USB Port, 2x USB 2.0
Serial / Com	1x COM
Serial Protocol Detail	1x RS-232/422/485 DB-9
Ethernet / LAN	1x RJ45 GbE LAN
Power Input Port	3-Pin DC-In (Phoenix Type)

Expansion Slots

SD card	1x Micro SD Slot

Enclosure

Material	Plastic
IP Rating	IP65 Front Bezel
Mounting Options	Panel Mount, Wall Mount

Peripherals & Wireless Connectivity

WiFi	Optional WiFi/3G Module (via mini-PCIe)
Sim Card	1x SIM Card Slot

Certification

Certifications	CE, FCC Class A

Display

Screen Size	10.1"
Screen Resolution	1024 x 600 (WSVGA)
Screen Ratio	16:9
Brightness	250 nits

Touch Screen

Touch Screen	Projected Capacitive, Resistive

Power

Input Voltage Range	9-36V DC
Standard Power Adapter	Optional 12V AC/DC Adapter

Operating Systems

Android	Android 6.0.1
Linux	Linux 4.1.15

Thermal & Environmental

Operating Temperature	0°C - 50°C (32°F – 122°F)
Storage Temperature	-20°C - 60°C (-4°F – 140°F)
Cooling Solution	Passive – Fanless with Heatsink
Humidity Range	10% – 90% Non-condensing

Weight / Dimensions

Weight	1.3 kg (2.9 lbs)
Dimensions	285 x 49.6 x 189 mm (11.2 x 2.0 x 7.4 in)

Warranty

Warranty	Up to 5 Years

Specifications subject to change.

USA
Teguar
2920 Whitehall Park Drive
Charlotte, NC 28273
+1 866-693-3105
sales@teguar.com

EUROPE
Teguar Europe AG
Churerstrasse 54, CH-8808
Pfäffikon, Switzerland
+41 41 561 53 11
sales.EU@teguar.com

ASIA
Teguar Taiwan Ltd.
Rm. A, 28F-12., No.99, Sec. 1, Xintai 5th Rd.,
Xizhi Dist., New Taipei City 221, Taiwan (R.O.C.)
+886 2 7751 5319
sales@teguar.com.tw

I/O Diagram Images



USA
Teguar
2920 Whitehall Park Drive
Charlotte, NC 28273
+1 866-693-3105
sales@teguar.com

EUROPE
Teguar Europe AG
Churerstrasse 54, CH-8808
Pfäffikon, Switzerland
+41 41 561 53 11
sales.EU@teguar.com

ASIA
Teguar Taiwan Ltd.
Rm. A, 28F-12., No.99, Sec. 1, Xintai 5th Rd.,
Xizhi Dist., New Taipei City 221, Taiwan (R.O.C.)
+886 2 7751 5319
sales@teguar.com.tw

Tech Diagram Images

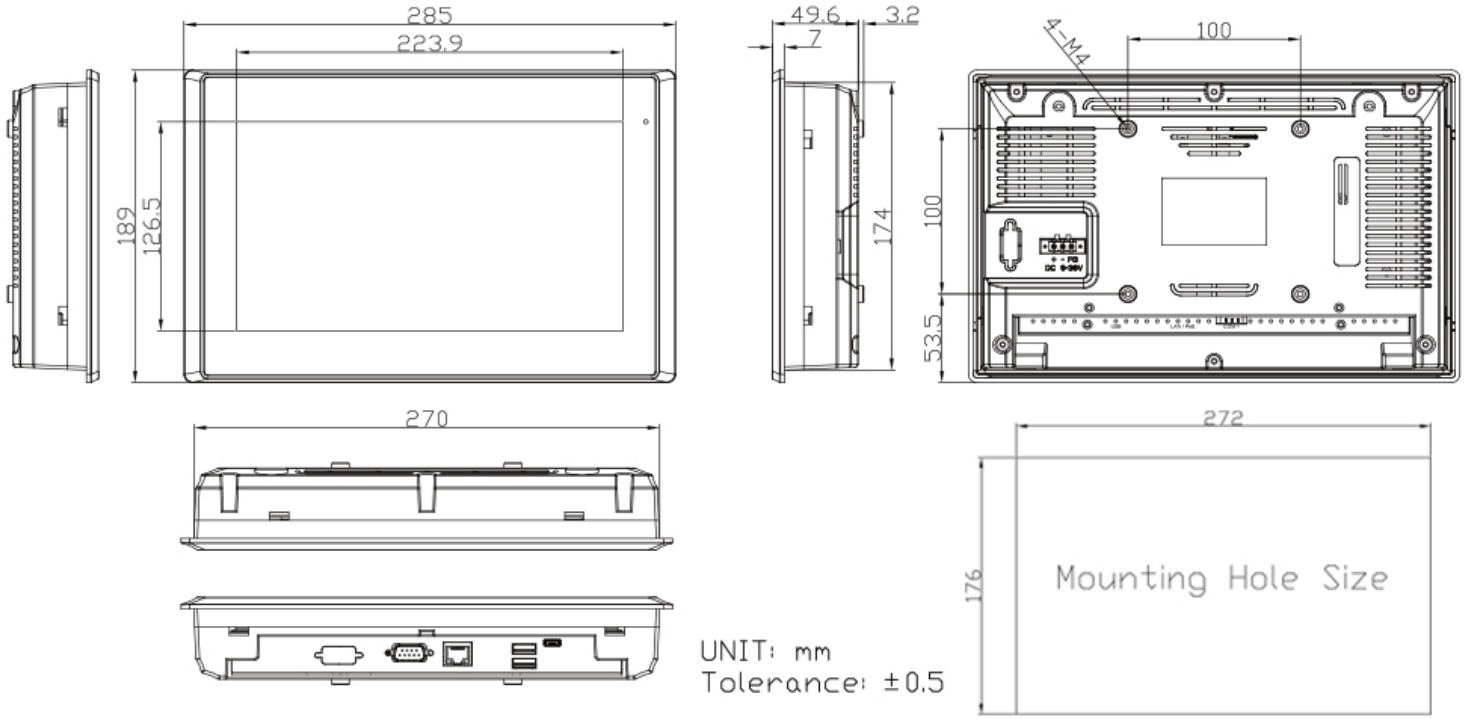

USA
Teguar
2920 Whitehall Park Drive
Charlotte, NC 28273
+1 866-693-3105
sales@teguar.com

EUROPE
Teguar Europe AG
Churerstrasse 54, CH-8808
Pfäffikon, Switzerland
+41 41 561 53 11
sales.EU@teguar.com

ASIA
Teguar Taiwan Ltd.
Rm. A, 28F-12., No.99, Sec. 1, Xintai 5th Rd.,
Xizhi Dist., New Taipei City 221, Taiwan (R.O.C.)
+886 2 7751 5319
sales@teguar.com.tw