TEGUAR

TSX-2920-15

15" Class 1 Div 2 Computer



Key Highlights

- 15" P-Cap Touchscreen
- Intel Celeron N2930 Processor
- Class 1, Division 2 Certified for Use in Hazardous Areas
- MIL-STD-810F/G and Fully IP65 Certified
- Wide Temperature Range (-20°C to 50°C)
- Optional 1000 Nit High Brightness LCD

VIEW ONLINE

The TSX-2920-15 is built for applications where gas, flammable air particles, or dust creates a hazardous environment where electrical equipment can increase the risk of explosions. This computer is Class 1 Division 2 (C1D2) certified, ensuring that it cannot emit any sparks that can cause an explosion in these hazardous settings. The stainless steel enclosure is rated IP65 waterproof and dustproof and this PC carries a MIL-STD-810F/G shock and vibration rating. The TSX-2920-15 can withstand a wide temperature range and has a fanless, highly efficient heat dissipation system. This explosion proof computer features a 1024 x 768 resolution LCD touchscreen and an Intel HD graphics video controller. With an Intel Celeron CPU, this PC can run ERP software, SCADA systems, or act as a data hub for your hazardous area application.

USA
Teguar
2920 Whitehall Park Drive
Charlotte, NC 28273
+1 866-693-3105
sales@teguar.com

EUROPE
Teguar Europe AG
Churerstrasse 54, CH-8808
Pfäffikon, Switzerland
+41 41 561 53 11
sales.EU@teguar.com

ASIA
Teguar Taiwan Ltd.
Rm. A, 28F-12., No.99, Sec. 1, Xintai 5th Rd.,
Xizhi Dist., New Taipei City 221, Taiwan (R.O.C.)
+886 2 7751 5319
sales@teguar.com.tw

Technical Specifications

Primary Components

Processor Family	Intel Celeron Bay Trail
Processor Model	N2930
Processor Speed	1.83 GHz
Memory Type	1x DDR3L SO-DIMM
Memory Support	2GB, 4GB, 8GB
Storage Type	mSATA
Storage Support	32GB-512GB

Power

Input Voltage Range	9-36V DC with Isolation
Max Power Consumption	56W
Standard Power Adapter	12V / 84W AC-to-DC Adapter (not C1D2, For Testing Purposes Only)

Operating Systems

Windows	Windows 10 IoT, Windows 10 Pro, Windows 7 Pro

Thermal & Environmental

Operating Temperature	-20°C - 50°C (-4°F – 122°F)
Cooling Solution	Passive – Fanless
Humidity Range	10% – 95% Non-condensing

Weight / Dimensions

Weight	11.5 kg (25.4 lbs)
Dimensions	396 x 310 x 49 mm (15.6 x 12.2 x 1.9 in)

Specifications subject to change.

Display

Screen Size	15"
Screen Resolution	1024 x 768 (XGA)
Screen Ratio	16:9
Brightness	550 nits, Optional 1000 nit High Brightness

Touch Screen

Touch Screen	Projected Capacitive

External I/O Ports

USB	1x M12 8Pin for USB 1/2
Serial / Com	1x COM
Serial Protocol Detail	1x M12 RS-232/RS422/RS485 Connector, Default RS232
Ethernet / LAN	1x M12 8pin RJ45 Gbe LAN
Audio Ports	1x Audio Line-Out
Power Input Port	M12 type 3-PIN DC-in

Enclosure

Material	Stainless Steel
IP Rating	IP65
Mounting Options	VESA 100 Mount

Certification

Certifications	CE, FCC

Warranty

Warranty	Up to 5 Years

USA
Teguar
2920 Whitehall Park Drive
Charlotte, NC 28273
+1 866-693-3105
sales@teguar.com

EUROPE
Teguar Europe AG
Churerstrasse 54, CH-8808
Pfäffikon, Switzerland
+41 41 561 53 11
sales.EU@teguar.com

ASIA
Teguar Taiwan Ltd.
Rm. A, 28F-12., No.99, Sec. 1, Xintai 5th Rd.,
Xizhi Dist., New Taipei City 221, Taiwan (R.O.C.)
+886 2 7751 5319
sales@teguar.com.tw

I/O Diagram Images



USA
Teguar
2920 Whitehall Park Drive
Charlotte, NC 28273
+1 866-693-3105
sales@teguar.com

EUROPE
Teguar Europe AG
Churerstrasse 54, CH-8808
Pfäffikon, Switzerland
+41 41 561 53 11
sales.EU@teguar.com

ASIA
Teguar Taiwan Ltd.
Rm. A, 28F-12., No.99, Sec. 1, Xintai 5th Rd.,
Xizhi Dist., New Taipei City 221, Taiwan (R.O.C.)
+886 2 7751 5319
sales@teguar.com.tw

Tech Diagram Images

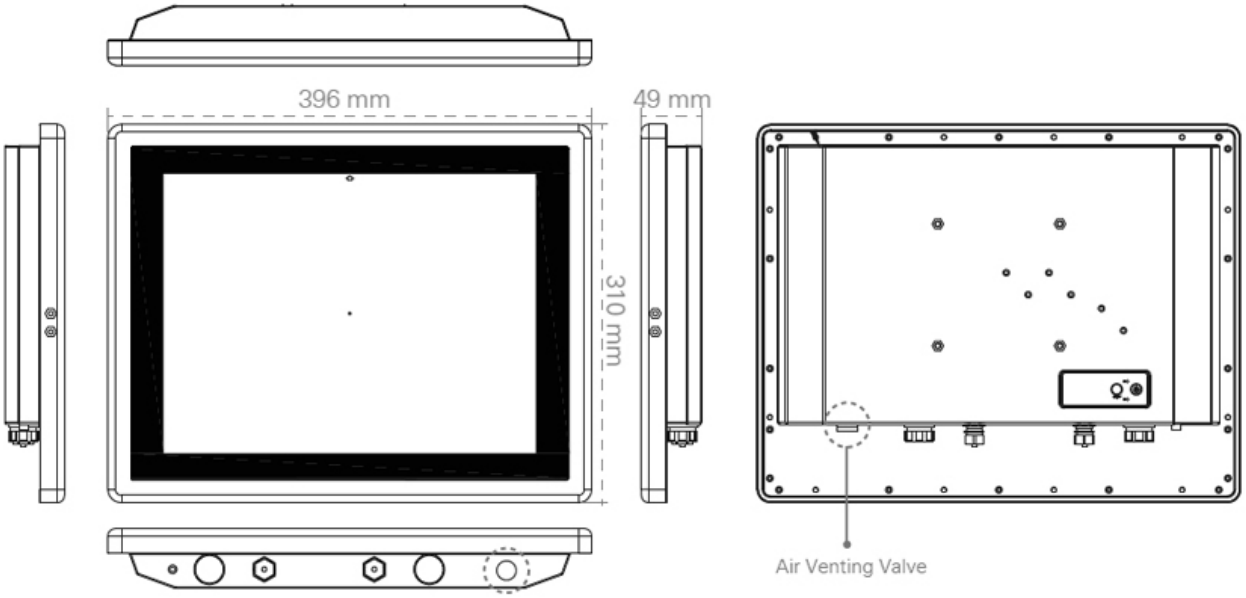

USA
Teguar
2920 Whitehall Park Drive
Charlotte, NC 28273
+1 866-693-3105
sales@teguar.com

EUROPE
Teguar Europe AG
Churerstrasse 54, CH-8808
Pfäffikon, Switzerland
+41 41 561 53 11
sales.EU@teguar.com

ASIA
Teguar Taiwan Ltd.
Rm. A, 28F-12., No.99, Sec. 1, Xintai 5th Rd.,
Xizhi Dist., New Taipei City 221, Taiwan (R.O.C.)
+886 2 7751 5319
sales@teguar.com.tw