TA-Q5340-18

18.5" All-in-One Android Touchscreen Kiosk



Key Highlights

- 18.5" Touchscreen Display
- Qualcomm CPU and Android 9.0
- Modular Design with Removable Box PC
- Multiple Mounting Options
- Customizable and Expandable

VIEW ONLINE

The TA-Q5340-18 is a durable and modular All-in-One Computer. It has a removable box PC on the back of the unit and expansion options on all four sides of the housing. It is ideal for touchscreen kiosks, point-of-sale systems, and light-industrial applications. This computer runs on a Qualcomm Snapdragon CPU and has an 18.5" full HD touchscreen. Optional peripherals include a 3-Track Magstripe Reader, Fingerprint Reader, HF RFID Reader, Supported Verifone® or Ingenico payment terminals, 2D Barcode Scanner, and 5MP Camera with mic. You can order this computer with a POS stand, printer stand, floor stand, or use its VESA mounting hole pattern to mount it onto virtually any stand or arm.

This product is now considered "Previous Generation" meaning it may or may not still be available for purchase. Call +1 800 870 7715 for details on this product or check out our full list of currently available Industrial All In One PCs.

USA
Teguar
2920 Whitehall Park Drive
Charlotte, NC 28273
+1 866-693-3105
sales@teguar.com

EUROPE
Teguar Europe AG
Churerstrasse 54, CH-8808
Pfäffikon, Switzerland
+41 41 561 53 11
sales.EU@teguar.com

ASIA
Teguar Taiwan Ltd.
Rm. A, 28F-12., No.99, Sec. 1, Xintai 5th Rd.,
Xizhi Dist., New Taipei City 221, Taiwan (R.O.C.)
+886 2 7751 5319
sales@teguar.com.tw

Technical Specifications

Primary Components

Processor Model	MT8735A QuadCore
Memory Type	Onboard DDR3
Storage Support	32GB

Touch Screen

Touch Screen	Projected Capacitive (Multi-touch)

Power

Input Voltage Range	19V DC

Operating Systems

Android	Android 9.0

Multimedia

Speakers	1x 3W Speaker
Camera	Optional Webcam

Enclosure

Material	Plastic
IP Rating	IP54 Front Bezel
Color	Black
Led Indicator Light	Power
Control Buttons	Power Button
Mounting Options	VESA 100 Mount, VESA 75 Mount

Weight / Dimensions

Weight	9.7 kg (21.4 lbs)
Dimensions	451 x 273 x 51 mm (17.8 x 10.7 x 2.0 in)

Warranty

Warranty	Up to 5 Years

Specifications subject to change.

Display

Screen Size	18.5"
Screen Resolution	1366 x 768
Screen Ratio	16:9
Brightness	250 nits

External I/O Ports

USB	1x USB 3.0 type C, 2x USB 2.0, 2x USB 3.0
Serial / Com	2x COM
Serial Protocol Detail	2x DB9 (Powered RS232) (COM1 0V*/5V, COM2 0V*/12V)
Ethernet / LAN	1x RJ45 GbE LAN
Other Ports	1x RJ11
Power Input Port	4-Pole DIN (latching)

Thermal & Environmental

Operating Temperature	0°C - 35°C (32°F – 95°F)
Storage Temperature	-20°C - 60°C (-4°F – 140°F)
Cooling Solution	Passive – Fanless
Humidity Range	20% – 85% Non-condensing

Peripherals & Wireless Connectivity

WiFi	WiFi/BT (a/b/g/n)
Barcode Scanner	Optional 1D/2D Barcode Scanner
RFID	Optional RFID
Peripheral Other	3-Track MSR; Fingerprint Reader; Supported Verifone® VX820, P400, Ingenico iPP 325; POS Stand; Printer Stand; Floor Stand; Printer, Epson® TM-m30 / TM-T88IV, Star mc-Print3/ TSP-100/TSP-654

Certification

Certifications	CE, FCC Class A, LVD

USA
Teguar
2920 Whitehall Park Drive
Charlotte, NC 28273
+1 866-693-3105
sales@teguar.com

EUROPE
Teguar Europe AG
Churerstrasse 54, CH-8808
Pfäffikon, Switzerland
+41 41 561 53 11
sales.EU@teguar.com

ASIA
Teguar Taiwan Ltd.
Rm. A, 28F-12., No.99, Sec. 1, Xintai 5th Rd.,
Xizhi Dist., New Taipei City 221, Taiwan (R.O.C.)
+886 2 7751 5319
sales@teguar.com.tw

I/O Diagram Images

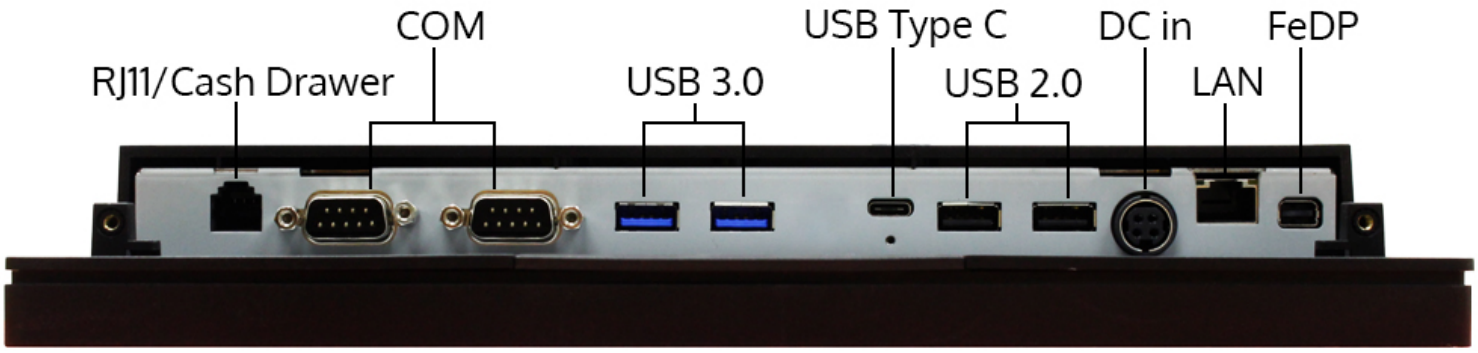

USA
Teguar
2920 Whitehall Park Drive
Charlotte, NC 28273
+1 866-693-3105
sales@teguar.com

EUROPE
Teguar Europe AG
Churerstrasse 54, CH-8808
Pfäffikon, Switzerland
+41 41 561 53 11
sales.EU@teguar.com

ASIA
Teguar Taiwan Ltd.
Rm. A, 28F-12., No.99, Sec. 1, Xintai 5th Rd.,
Xizhi Dist., New Taipei City 221, Taiwan (R.O.C.)
+886 2 7751 5319
sales@teguar.com.tw

Tech Diagram Images

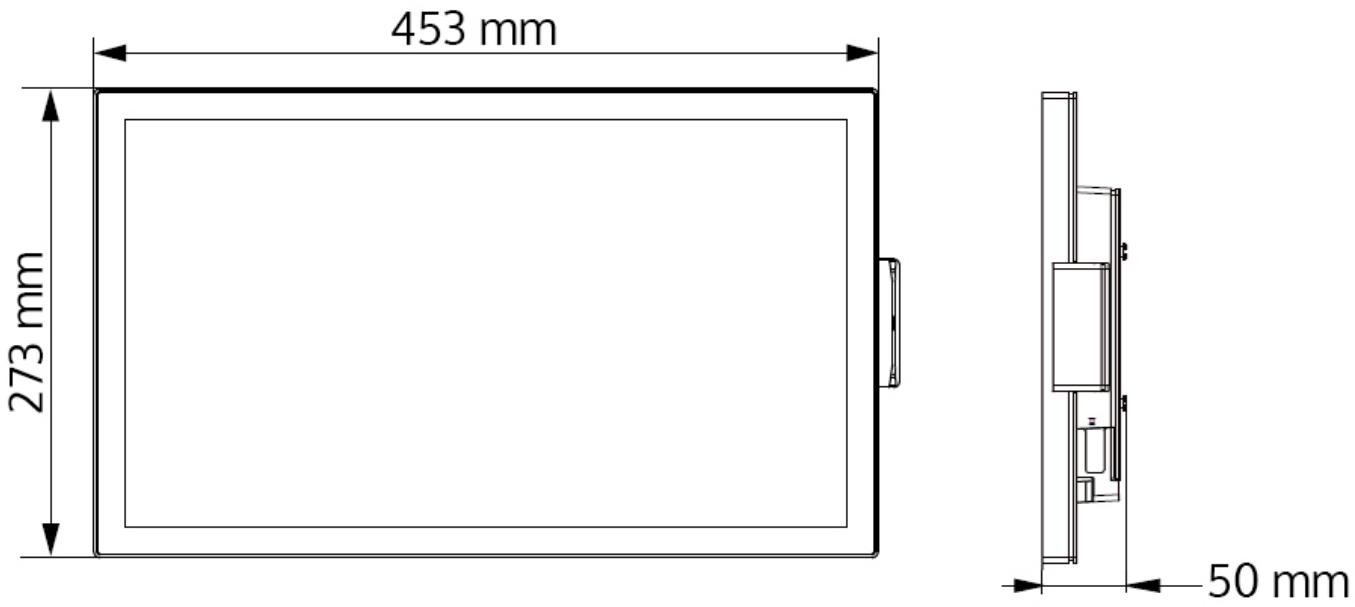

USA
Teguar
2920 Whitehall Park Drive
Charlotte, NC 28273
+1 866-693-3105
sales@teguar.com

EUROPE
Teguar Europe AG
Churerstrasse 54, CH-8808
Pfäffikon, Switzerland
+41 41 561 53 11
sales.EU@teguar.com

ASIA
Teguar Taiwan Ltd.
Rm. A, 28F-12., No.99, Sec. 1, Xintai 5th Rd.,
Xizhi Dist., New Taipei City 221, Taiwan (R.O.C.)
+886 2 7751 5319
sales@teguar.com.tw