TEGUAR

# TS-4510-22

## 21.5" IP66 Computer




## Key Highlights

- 21.5" Resistive or Pcap Touchscreen
- Intel Apollo Lake J3455 Processor
- Widescreen 1920 x 1080 HD Display
- IP66 / IP69K and Optional IP67
- Optional 1000 nit Highbright Screen

VIEW ONLINE

The TS-4510-22 has a large 21.5" touchscreen display, for easy readability and data input in your for food processing plant or washdown environment. The front bezel is full flush, meaning there are no crevices where debris and dirt can build up. The housing of this computer is fully sealed and made with corrosion-proof stainless steel. This PC is rated IP66 / IP69K, for protection from high-temperature, high-pressure waterjets. You can also configure the PC for IP67, which protects the computer from submersion in water. Other customization options include resistive or Pcap touch and 1000 nit high brightness with optical bonding for better performance in low screen visibility environments.

**USA**
Teguar
2920 Whitehall Park Drive
Charlotte, NC 28273
+1 866-693-3105
sales@teguar.com

**EUROPE**
Teguar Europe AG
Churerstrasse 54, CH-8808
Pfäffikon, Switzerland
+41 41 561 53 11
sales.EU@teguar.com

**ASIA**
Teguar Taiwan Ltd.
Rm. A, 28F-12., No.99, Sec. 1, Xintai 5th Rd.,
Xizhi Dist., New Taipei City 221, Taiwan (R.O.C.)
+886 2 7751 5319
sales@teguar.com.tw

# Technical Specifications

## Primary Components

| | |
|---|---|
| **Processor Family** | Intel Celeron Apollo Lake |
| **Processor Model** | J3455 Quad Core |
| **Processor Speed** | 1.5 GHz |
| **Memory Type** | 1x DDR3L SO-DIMM |
| **Memory Support** | 4GB, 8GB |
| **Storage Type** | 1x 2.5" SATA Drive Bay for SSD/HDD, M.2 |
| **Storage Support** | 32GB-1TB |

## External I/O Ports

| | |
|---|---|
| **USB** | 2x M12 8Pin for USB 1/2 and USB 3/4 |
| **Serial / Com** | 2x M12 8-pin for COM |
| **Serial Protocol Detail** | 1x RS-232, 1x RS-232/422/485 |
| **Ethernet / LAN** | 1x M12 8pin RJ45 Gbe LAN |
| **Power Input Port** | M12 type 5-PIN DC-in |

## Compatibility

| | |
|---|---|
| **Security Hardware** | Optional TPM 2.0 |

## Multimedia

| | |
|---|---|
| **Speakers** | Optional Speakers |

## Enclosure

| | |
|---|---|
| **Material** | Optional SUS316 Stainless Steel, SUS304 Stainless Steel |
| **IP Rating** | IP66, IP69K, NEMA 4X, Optional IP67 |
| **Color** | Stainless Steel |
| **Control Buttons** | Power Button |
| **Mounting Options** | Table Mount, VESA 100 Mount, Wall Mount |
| **Approved Cleaning Solutions** | Acetic Acid (low concentration), Ammonium Nitrate (low concentration), Benzine, Citric Acid (low concentration), Ethanol, Ethylene Glycol Solution (1:1 with water), Hexane, Hydrochloric Acid (low concentration), Iron Chloride Solution, Isooctane, Isopropyl Alcohol, Nitric Acid, Paraffin, Perhydrol (30% in water), Phosphoric Acid (low concentration), Propane, Silicone Oil, Sodium Carbonate (low concentration), Sodium Chloride Solution, Sodium Nitrate (low concentration), Sulfuric Acid (low concentration), Triethylene Glycol |

## Weight / Dimensions

| | |
|---|---|
| **Weight** | 12 kg (26.5 lbs) |
| **Dimensions** | 557 x 58.5 x 348.5 mm (21.9 x 2.3 x 13.7 in) |

## Warranty

| | |
|---|---|
| **Warranty** | Up to 5 Years |

***Specifications subject to change.***

## Display

| | |
|---|---|
| **Screen Size** | 21.5" |
| **Screen Resolution** | 1920 x 1080 (Full HD) |
| **Screen Ratio** | 16:9 |
| **Brightness** | 250 nits, Optional 1000 nit High Brightness |

## Touch Screen

| | |
|---|---|
| **Touch Screen** | 5 Wire Resistive, Projected Capacitive |
| **Hardness** | Resistive: 4H, P-cap: 7H |

## Power

| | |
|---|---|
| **Input Voltage Range** | 9-32V DC |
| **Max Power Consumption** | 43W |
| **Standard Power Adapter** | AC 100~240V / 47 ~ 63Hz, IP68, 60W |

## Operating Systems

| | |
|---|---|
| **Windows** | Windows 10 IoT, Windows 10 Pro |
| **Linux** | Linux (Contact your sales rep for more information) |

## Expansion Slots

| | |
|---|---|
| **Internal M.2** | 1x M.2 Type E |

## Thermal & Environmental

| | |
|---|---|
| **Operating Temperature** | 0°C ~ 45°C (32°F ~ 113°F) |
| **Storage Temperature** | -20°C ~ 60°C (-4°F ~ 140°F) |
| **Cooling Solution** | Passive – Fanless |
| **Humidity Range** | 10% ~ 90% Non-condensing |
| **Storage Humidity** | 10% ~ 90% Non-condensing |

## Peripherals & Wireless Connectivity

| | |
|---|---|
| **WiFi** | Optional WiFi + Bluetooth Flat Antenna Kit |
| **Bluetooth** | Optional Bluetooth 4.0 |
| **Barcode Scanner** | Optional 1D/2D Barcode Scanner |

## Certification

| | |
|---|---|
| **Certifications** | CE, FCC, VCCI Class B |


**USA**
**Teguar**
**2920 Whitehall Park Drive**
**Charlotte, NC 28273**
**+1 866-693-3105**
**sales@teguar.com**

**EUROPE**
**Teguar Europe AG**
**Churerstrasse 54, CH-8808**
**Pfäffikon, Switzerland**
**+41 41 561 53 11**
**sales.EU@teguar.com**

**ASIA**
**Teguar Taiwan Ltd.**
**Rm. A, 28F-12., No.99, Sec. 1, Xintai 5th Rd.,**
**Xizhi Dist., New Taipei City 221, Taiwan (R.O.C.)**
**+886 2 7751 5319**
**sales@teguar.com.tw**

## I/O Diagram Images

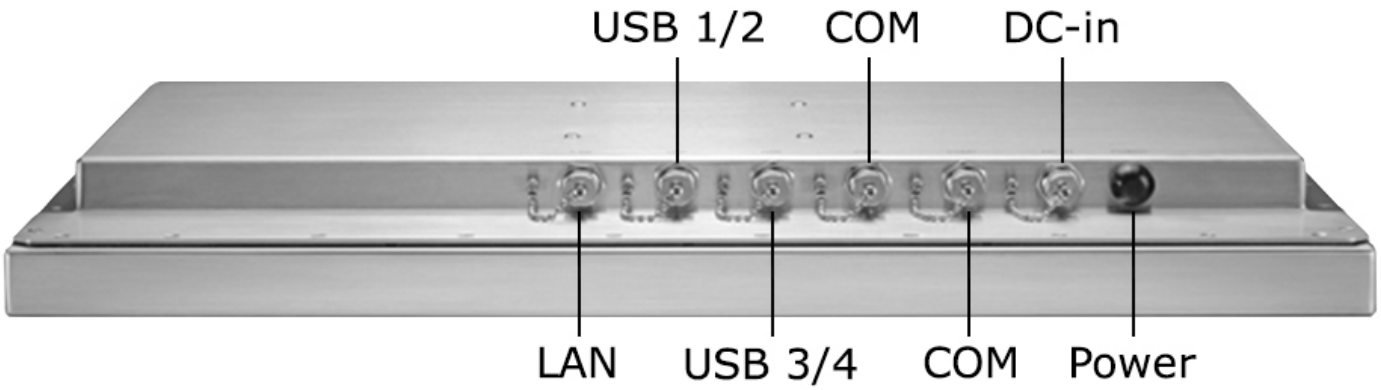


**USA**
Teguar
2920 Whitehall Park Drive
Charlotte, NC 28273
+1 866-693-3105
sales@teguar.com

**EUROPE**
Teguar Europe AG
Churerstrasse 54, CH-8808
Pfäffikon, Switzerland
+41 41 561 53 11
sales.EU@teguar.com

**ASIA**
Teguar Taiwan Ltd.
Rm. A, 28F-12., No.99, Sec. 1, Xintai 5th Rd.,
Xizhi Dist., New Taipei City 221, Taiwan (R.O.C.)
+886 2 7751 5319
sales@teguar.com.tw

## Tech Diagram Images

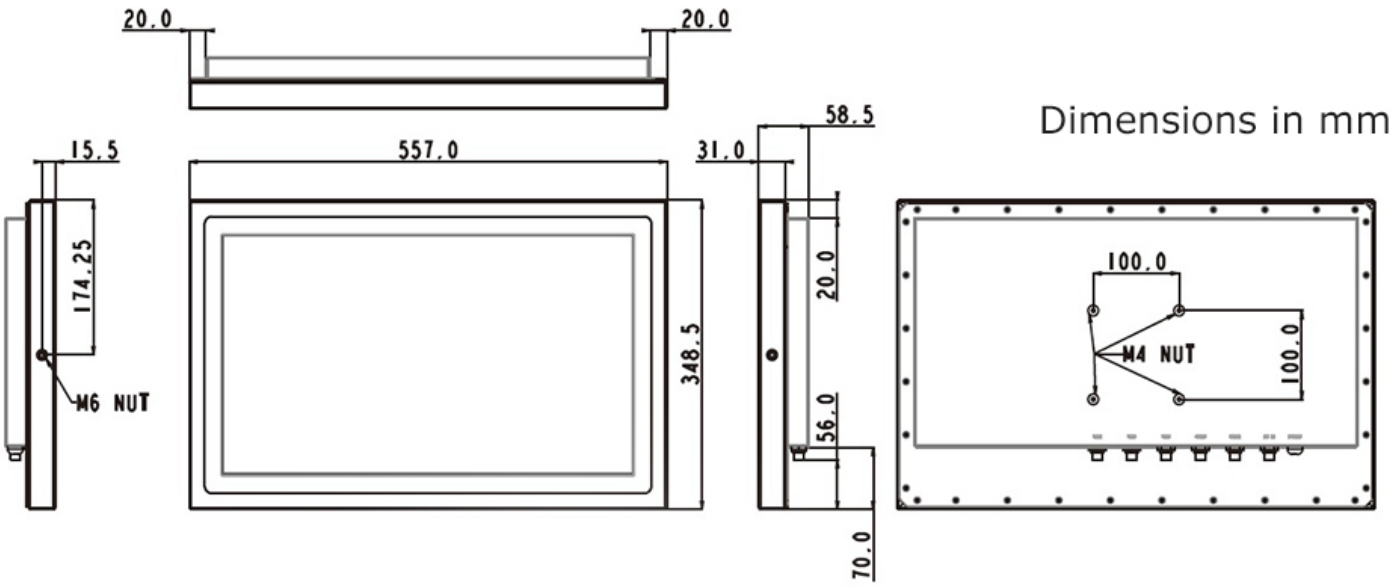



**USA**
Teguar
2920 Whitehall Park Drive
Charlotte, NC 28273
+1 866-693-3105
sales@teguar.com

**EUROPE**
Teguar Europe AG
Churerstrasse 54, CH-8808
Pfäffikon, Switzerland
+41 41 561 53 11
sales.EU@teguar.com

**ASIA**
Teguar Taiwan Ltd.
Rm. A, 28F-12., No.99, Sec. 1, Xintai 5th Rd.,
Xizhi Dist., New Taipei City 221, Taiwan (R.O.C.)
+886 2 7751 5319
sales@teguar.com.tw