TEGUAR

TRT-Q5393-07

7" Rugged Mini Tablet with Android



Key Highlights

- 7" Touchscreen with Anti-Glare Coating
- Qualcomm Snapdragon SDM450 Octa-Core
- GMS Certified for Android 9.0
- 4G LTE, WiFi, BT 4.2 and GPS
- MIL-STD-810G Shock and Drop Proof

VIEW ONLINE

The TRT-Q5393-07 is a 7" touchscreen tablet PC for industrial and rugged applications. It is MIL-STD-810G rated for protection from shocks, drops and machine vibration. It has a 600 nit display with optical bonding and an anti-glare coating, for easy readability in a vehicle, outdoors, or under bright overhead lights. This tablet runs on a Qualcomm Snapdragon Octa-Core CPU and it is GMS certified for Android 9.0. The TRT-Q5393-07 is Verizon and AT&T Carrier Certified. This rugged tablet PC is ideal for fleet management, logistics applications and field services, due to its compact size, light weight, and durability. >> Check out how this rugged tablet handles industrial application in our Teguar Torture Test

USA
Teguar
2920 Whitehall Park Drive
Charlotte, NC 28273
+1 866-693-3105
sales@teguar.com

EUROPE
Teguar Europe AG
Churerstrasse 54, CH-8808
Pfäffikon, Switzerland
+41 41 561 53 11
sales.EU@teguar.com

ASIA
Teguar Taiwan Ltd.
Rm. A, 28F-12., No.99, Sec. 1, Xintai 5th Rd.,
Xizhi Dist., New Taipei City 221, Taiwan (R.O.C.)
+886 2 7751 5319
sales@teguar.com.tw

Technical Specifications

Primary Components

Processor Family	Qualcomm Snapdragon 450 OctaCore
Processor Speed	1.8 GHz
Memory Type	Onboard DDR3
Memory Support	2GB
Storage Type	Onboard eMMC Flash
Storage Support	32GB

External I/O Ports

USB	1x USB 2.0 type C (OTG)
Power Input Port	Pogo Pin Connector

Battery

Battery Type	Internal 4,000mAh Battery

Expansion Slots

SD card	1x Micro SD Slot

Thermal & Environmental

Operating Temperature	-20°C - 60°C (-4°F – 140°F)
Storage Temperature	-30°C - 70°C (-22°F – 158°F)
Cooling Solution	Passive – Fanless
Humidity Range	5% – 95% Non-condensing
Storage Humidity	5% – 95% Non-condensing

Peripherals & Wireless Connectivity

WiFi	Dual-Band WIFI (802.11 a/b/g/n/ac)
Bluetooth	Bluetooth 4.2
GPS	yes
Mobile Network 4G LTE	4G LTE
Sim Card	1x Micro SIM Card Slot, 1x SIM Card Slot
RFID	RFID (HF)
Sensors	Accelerometer, Compass, Gyroscope, Light Sensor

Warranty

Warranty	1 Year

Specifications subject to change.

Display

Screen Size	7"
Screen Resolution	1024 x 600 (WSVGA)
Screen Ratio	16:9
Brightness	600 nits

Touch Screen

Touch Screen	Projected Capacitive
Hardness	> 7H

Power

Input Voltage Range	5V DC
Standard Power Adapter	US AC/DC USB 5V Power Supply

Operating Systems

Android	Android 9.0

Multimedia

Speakers	1x 0.8W Speaker
Camera	Front: 8MP, Rear: 8MP w/flash
Microphone	2x Built-in Microphones

Enclosure

Material	PC+ABS
IP Rating	IP54 Front Bezel
Color	Black
Control Buttons	Audio Down, Audio Up, Power Button
Shock Rating	MIL-STD-810G, SAE J1455
Drop Rating	6ft Drop Protection with bumpers
Mounting Options	Forklift Mount, Vehicle Mount

Weight / Dimensions

Weight	0.5 kg (1.1 lbs)
Dimensions	132 x 210.8 x 20.55 mm (5.2 x 8.3 x 0.8 in)

USA
Teguar
2920 Whitehall Park Drive
Charlotte, NC 28273
+1 866-693-3105
sales@teguar.com

EUROPE
Teguar Europe AG
Churerstrasse 54, CH-8808
Pfäffikon, Switzerland
+41 41 561 53 11
sales.EU@teguar.com

ASIA
Teguar Taiwan Ltd.
Rm. A, 28F-12., No.99, Sec. 1, Xintai 5th Rd.,
Xizhi Dist., New Taipei City 221, Taiwan (R.O.C.)
+886 2 7751 5319
sales@teguar.com.tw

I/O Diagram Images

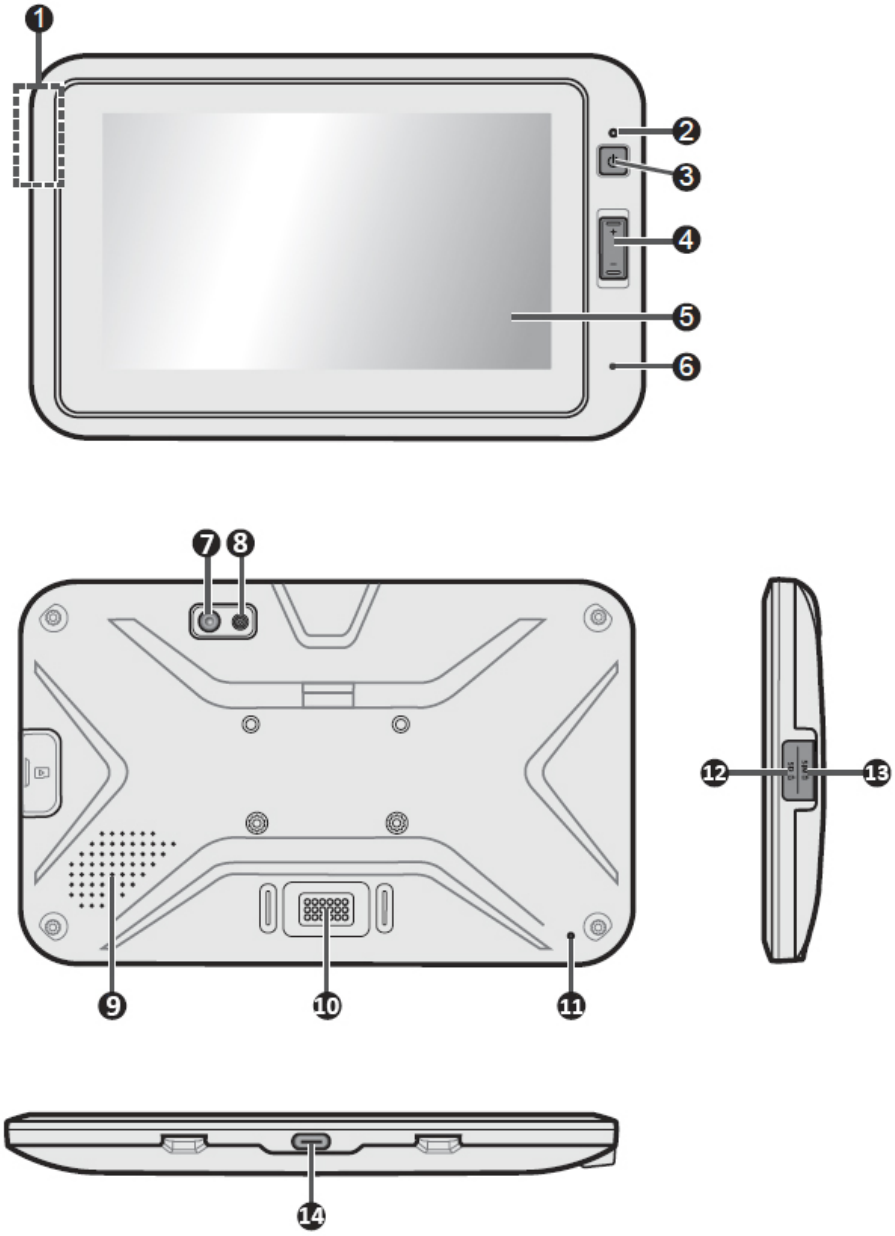

1. NFC sensor*
2. Light sensor
3. Power button
4. Volume buttons
5. Touchscreen
6. Microphone
7. Camera lens*
8. Flash LED*
9. Speaker
10. Dock connector
11. Microphone
12. Memory card slot
13. Micro-SIM slot*
14. USB Type C connector

* For select models only

USA
Teguar
2920 Whitehall Park Drive
Charlotte, NC 28273
+1 866-693-3105
sales@teguar.com

EUROPE
Teguar Europe AG
Churerstrasse 54, CH-8808
Pfäffikon, Switzerland
+41 41 561 53 11
sales.EU@teguar.com

ASIA
Teguar Taiwan Ltd.
Rm. A, 28F-12., No.99, Sec. 1, Xintai 5th Rd.,
Xizhi Dist., New Taipei City 221, Taiwan (R.O.C.)
+886 2 7751 5319
sales@teguar.com.tw