TEGUAR

TB-4045

Rugged Box PC



Key Highlights

- Intel Celeron J1900 CPU
- Wall Mountable, Compact Form Factor
- Fanless, Rugged Housing
- Wide Operating Temp (-20°C – 70°C)

VIEW ONLINE

The TB-4045 Rugged Mini PC is a compact, reliable solution, at a similar price-point to consumer-grade PCs. This box PC is made for production lines, warehouses, control cabinets, and other enduring environments with heat, dust, or machine vibration that would damage a consumer-grade PC. The TB-4045 is small enough to fit next to your equipment and provide you a smooth windows operating system experience. It is fanless and has a wide operating temperature range. It also has abundant inputs/outputs and it runs on a quad-core Celeron CPU.

USA
Teguar
2920 Whitehall Park Drive
Charlotte, NC 28273
+1 866-693-3105
sales@teguar.com

EUROPE
Teguar Europe AG
Churerstrasse 54, CH-8808
Pfäffikon, Switzerland
+41 41 561 53 11
sales.EU@teguar.com

ASIA
Teguar Taiwan Ltd.
Rm. A, 28F-12., No.99, Sec. 1, Xintai 5th Rd.,
Xizhi Dist., New Taipei City 221, Taiwan (R.O.C.)
+886 2 7751 5319
sales@teguar.com.tw

Technical Specifications

Primary Components

Processor Family	Intel Celeron Bay Trail
Processor Model	J1900 Quad Core
Processor Speed	2.0 GHz
Memory Type	1x DDR3L SO-DIMM
Memory Support	4GB, 8GB
Storage Type	1x 2.5" SATA Drive Bay for SSD/HDD, mSATA
Storage Support	32GB-2TB

Power

Input Voltage Range	9-36V DC

Compatibility

Security Hardware	Optional TPM 2.0

Enclosure

Material	Titanium Aluminum
Color	Black, Gray
Control Buttons	Power Button
Mounting Options	Wall Mount

Peripherals & Wireless Connectivity

WiFi	Optional WIFI via mPCIe expansion
Bluetooth	Optional Bluetooth 4.0
Mobile Network 4G LTE	Optional Cellular data via mPCIe expansion
Sim Card	1x SIM Card Slot

Warranty

Warranty	Up to 5 Years

Specifications subject to change.

External I/O Ports

USB	2x USB 2.0, 2x USB 3.0
Serial / Com	4x COM
Serial Protocol Detail	Com1 configurable in BIOS RS-232/422/485; Com2 RS-232; COM3 and 4 RS-485 only
Ethernet / LAN	2x RJ45 GbE LAN
Video Outputs	1x HDMI, 1x VGA
Other Ports	OPTIONAL: 1x 8-bit GPIO (4x DI, 4x DO)
Power Input Port	2-Pin Power Switch, 3-Pin DC-In (Phoenix Type)

Operating Systems

Windows	Windows 10 IoT, Windows 10 Pro, Windows 7 Pro
Linux	Linux (Contact your sales rep for more information)

Thermal & Environmental

Operating Temperature	-20°C - 70°C (-4°F – 158°F)
Storage Temperature	-40°C - 85°C (-40°F – 185°F)
Cooling Solution	Passive – Fanless with Heatsink
Humidity Range	10% – 90% Non-condensing
Storage Humidity	10% – 90% Non-condensing

Weight / Dimensions

Weight	1.05 kg (2.3 lbs)
Dimensions	180 x 130 x 35.5 mm (7.1 x 5.1 x 1.4 in)

Certification

Certifications	ANSI C63.4, CE, FCC Class A, IEC 61000-3-2 (EMC), IEC 61000-3-3 (EMC), IEC 61000-4 (ESD)

USA
Teguar
2920 Whitehall Park Drive
Charlotte, NC 28273
+1 866-693-3105
sales@teguar.com

EUROPE
Teguar Europe AG
Churerstrasse 54, CH-8808
Pfäffikon, Switzerland
+41 41 561 53 11
sales.EU@teguar.com

ASIA
Teguar Taiwan Ltd.
Rm. A, 28F-12., No.99, Sec. 1, Xintai 5th Rd.,
Xizhi Dist., New Taipei City 221, Taiwan (R.O.C.)
+886 2 7751 5319
sales@teguar.com.tw

I/O Diagram Images

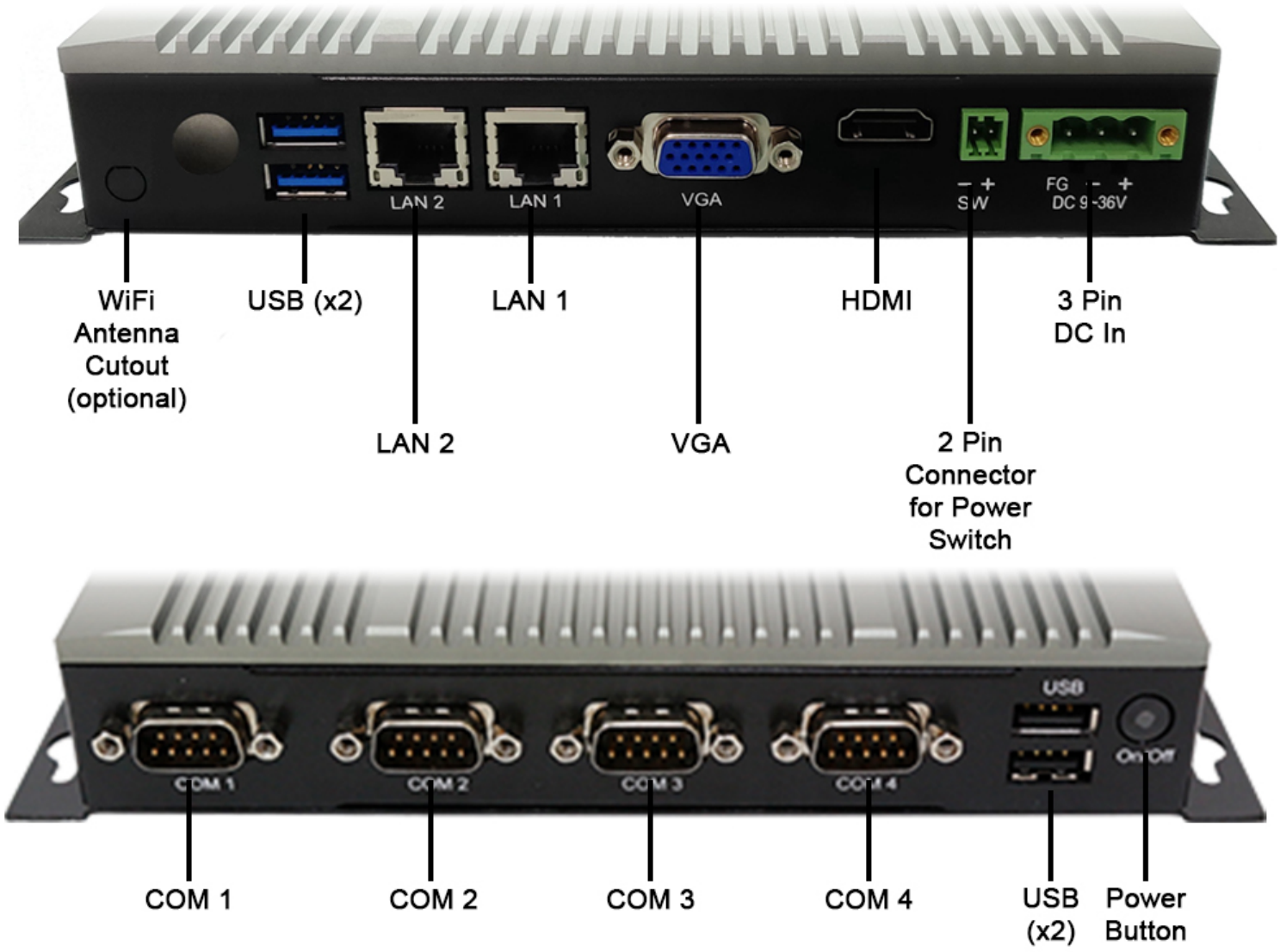

USA
Teguar
2920 Whitehall Park Drive
Charlotte, NC 28273
+1 866-693-3105
sales@teguar.com

EUROPE
Teguar Europe AG
Churerstrasse 54, CH-8808
Pfäffikon, Switzerland
+41 41 561 53 11
sales.EU@teguar.com

ASIA
Teguar Taiwan Ltd.
Rm. A, 28F-12., No.99, Sec. 1, Xintai 5th Rd.,
Xizhi Dist., New Taipei City 221, Taiwan (R.O.C.)
+886 2 7751 5319
sales@teguar.com.tw

Tech Diagram Images

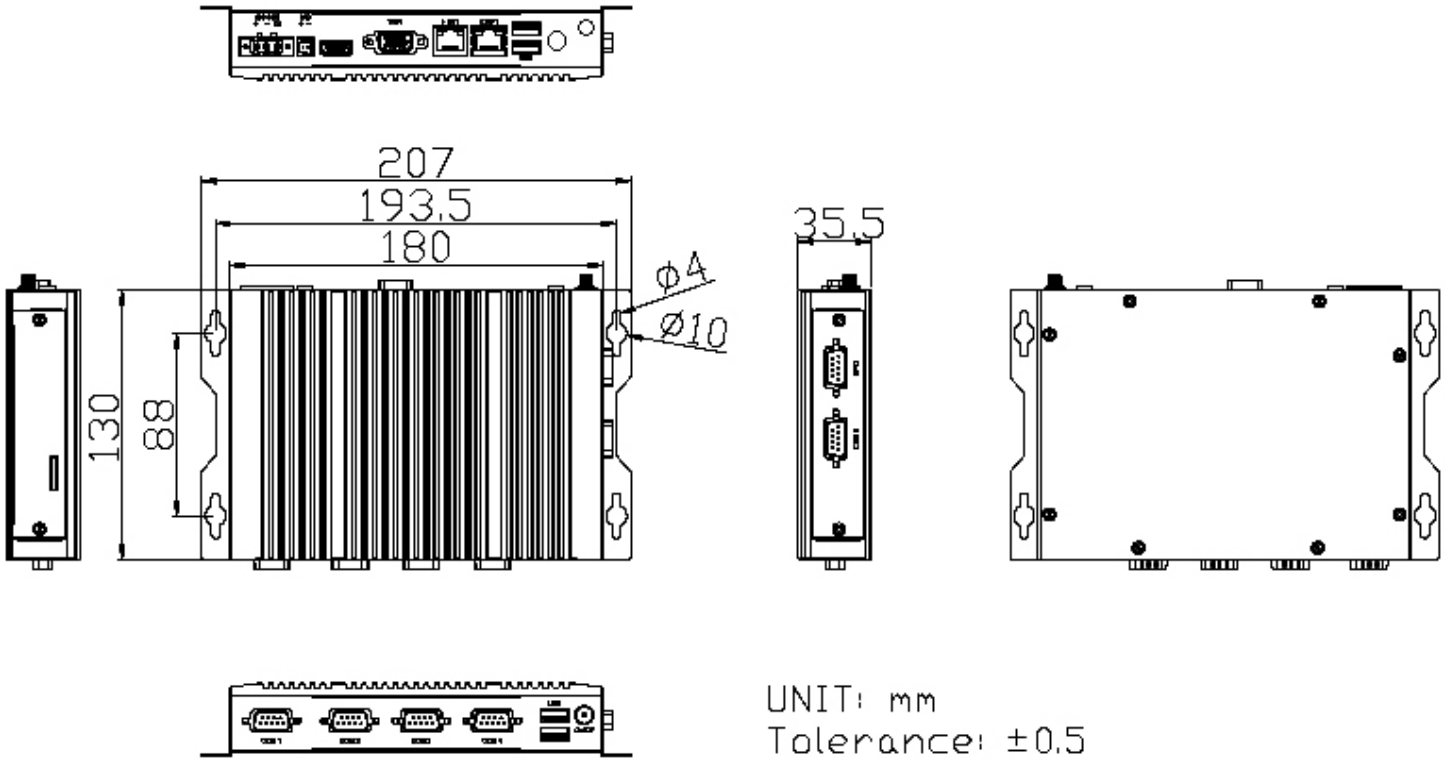

USA
Teguar
2920 Whitehall Park Drive
Charlotte, NC 28273
+1 866-693-3105
sales@teguar.com

EUROPE
Teguar Europe AG
Churerstrasse 54, CH-8808
Pfäffikon, Switzerland
+41 41 561 53 11
sales.EU@teguar.com

ASIA
Teguar Taiwan Ltd.
Rm. A, 28F-12., No.99, Sec. 1, Xintai 5th Rd.,
Xizhi Dist., New Taipei City 221, Taiwan (R.O.C.)
+886 2 7751 5319
sales@teguar.com.tw