TEGUAR

TP-4810-10W

10" Widescreen Fanless Panel PC



Key Highlights

- 10" Widescreen Display with 1280 x 800 resolution
- Windows 11 Capabilities
- Fanless Cooling System
- Intel Celeron J6412 Processor
- Multiple Inputs and Outputs including 4x USB, 1 Gb LAN, 2.5 Gb LAN, 3x COM and more

VIEW ONLINE

The TP-4810-10 Widescreen is a panel PC with a P-capacitive touchscreen display. This unit is built with the Intel Celeron J6412 processor, which is powerful enough to run Windows 11 operating system smoothly. The widescreen display comes in a 1280 x 800 resolution and is ideal for specific panel mount solutions. This unit is packed with abundant inputs and outputs, including 3x COM, 2x USB 2.0, 2x USB 3.2, 1x Gigabit LAN, 1x 2.5 Gigabit LAN, and more. Additionally, the front bezel is IP66 waterproof rated and can come in either resistive or P-capacitive touchscreens.

USA
Teguar
2920 Whitehall Park Drive
Charlotte, NC 28273
+1 866-693-3105
sales@teguar.com

EUROPE
Teguar Europe AG
Churerstrasse 54, CH-8808
Pfäffikon, Switzerland
+41 41 561 53 11
sales.EU@teguar.com

ASIA
Teguar Taiwan Ltd.
Rm. A, 28F-12., No.99, Sec. 1, Xintai 5th Rd.,
Xizhi Dist., New Taipei City 221, Taiwan (R.O.C.)
+886 2 7751 5319
sales@teguar.com.tw

Technical Specifications

Primary Components

Processor Family	Intel Celeron Elkhart Lake
Processor Model	Celeron J6412
Processor Speed	2.0 GHz
Memory Type	2x DDR4 SO-DIMM
Memory Support	32GB
Storage Type	1x M.2 SATA3 2280 Slot
Storage Support	M.2 and 2.5": 128GB - 1TB

External I/O Ports

USB	2x USB 2.0, 2x USB 3.2
Serial / Com	3x COM
Serial Protocol Detail	1x RS-232, 2x RS-232/422/485
Ethernet / LAN	1x RJ45 2.5 GbE LAN, 1x RJ45 GbE LAN
Video Outputs	1x HDMI, 1x VGA
Audio Ports	2x 3.5mm Audio Line-Out/Mic-In
Power Input Port	4-Pole DIN (latching)

Expansion Slots

Internal M.2	1x M.2 Type B
Other	1x SIM socket connected to M.2 B-Key

Enclosure

Material	Aluminum front bezel and SECC Steel Chassis
IP Rating	IP66 Front Bezel
Color	Black
Control Buttons	Power Reset

Certification

Certifications	CE, FCC

Display

Screen Size	10.1"
Screen Resolution	1280 x 800 (WXGA)
Screen Ratio	16:10
Brightness	400 nits

Touch Screen

Touch Screen	Projected Capacitive (Multi-touch)
Hardness	> 7H

Power

Input Voltage Range	12-28V DC
Max Power Consumption	59.3W
Standard Power Adapter	60 watts, 100 ~240V AC in, 19V DC out

Operating Systems

Windows	Windows 10 IoT, Windows 10 Pro, Windows 11 IoT, Windows 11 Pro

Compatibility

Security Hardware	Optional TPM 2.0

Thermal & Environmental

Operating Temperature	0°C - 45°C (32°F – 113°F)
Storage Temperature	-20°C - 65°C (-4°F – 149°F)
Cooling Solution	Passive – Fanless with Heatsink
Humidity Range	10% – 90% Non-condensing
Storage Humidity	10% – 90% Non-condensing

Weight / Dimensions

Weight	3.0 kg (6.6 lbs)
Dimensions	313 x 240 x 54 mm (12.3 x 9.4 x 2.1 in)

Warranty

Warranty	1 Year

Specifications subject to change.

USA
Teguar
2920 Whitehall Park Drive
Charlotte, NC 28273
+1 866-693-3105
sales@teguar.com

EUROPE
Teguar Europe AG
Churerstrasse 54, CH-8808
Pfäffikon, Switzerland
+41 41 561 53 11
sales.EU@teguar.com

ASIA
Teguar Taiwan Ltd.
Rm. A, 28F-12., No.99, Sec. 1, Xintai 5th Rd.,
Xizhi Dist., New Taipei City 221, Taiwan (R.O.C.)
+886 2 7751 5319
sales@teguar.com.tw

I/O Diagram Images

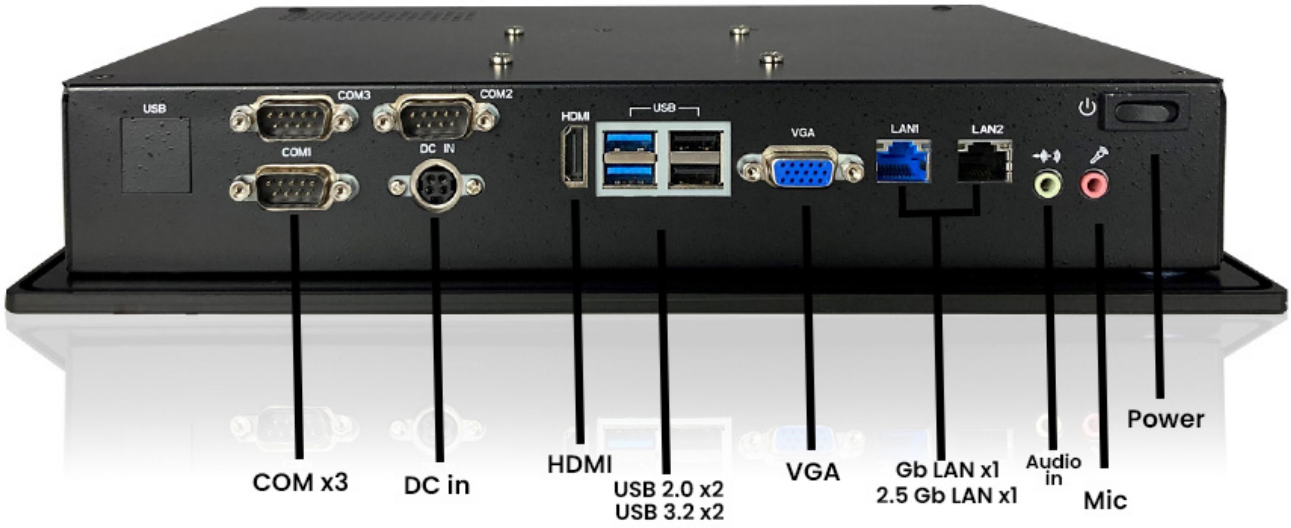

USA
Teguar
2920 Whitehall Park Drive
Charlotte, NC 28273
+1 866-693-3105
sales@teguar.com

EUROPE
Teguar Europe AG
Churerstrasse 54, CH-8808
Pfäffikon, Switzerland
+41 41 561 53 11
sales.EU@teguar.com

ASIA
Teguar Taiwan Ltd.
Rm. A, 28F-12., No.99, Sec. 1, Xintai 5th Rd.,
Xizhi Dist., New Taipei City 221, Taiwan (R.O.C.)
+886 2 7751 5319
sales@teguar.com.tw

Tech Diagram Images

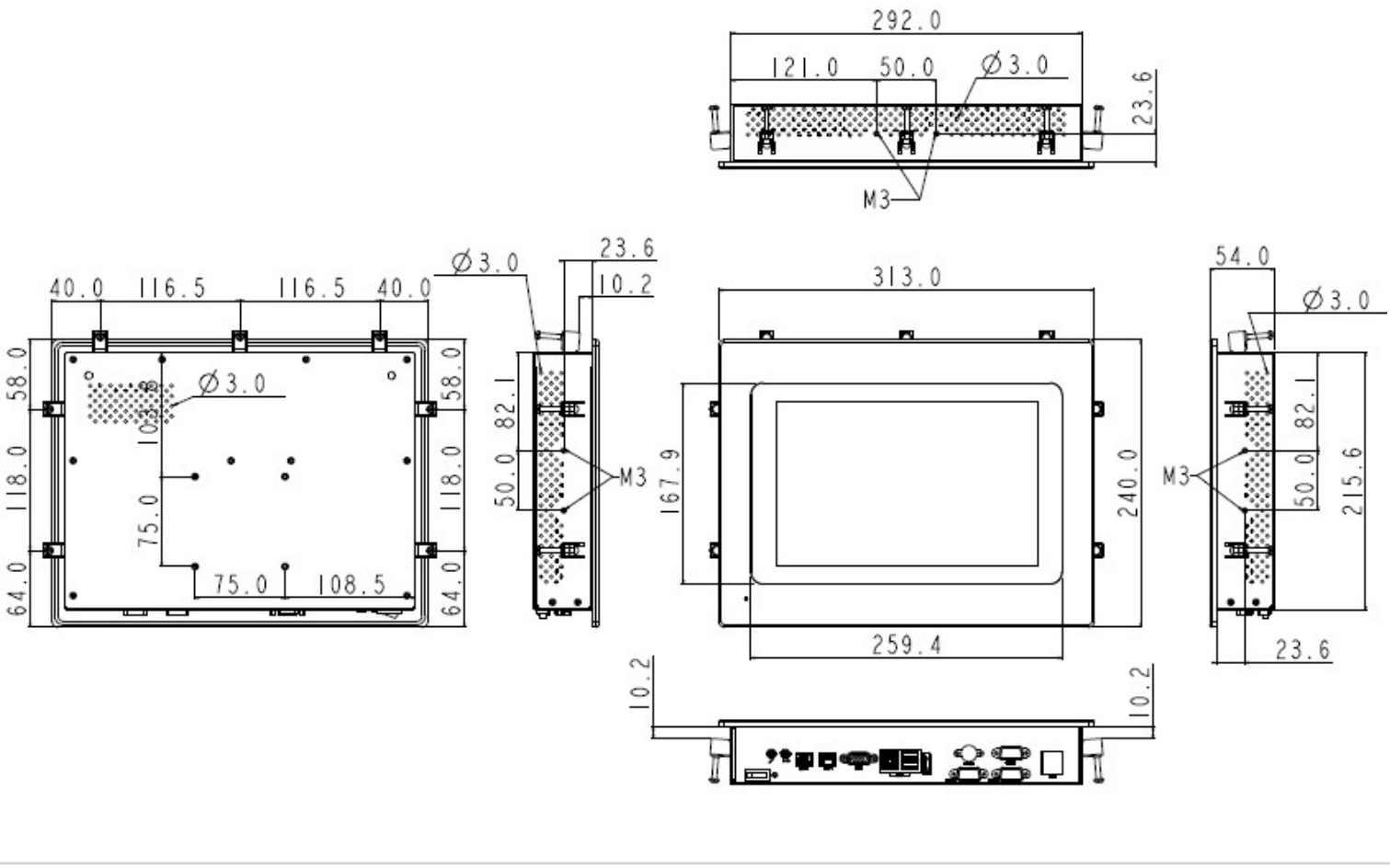

USA
Teguar
2920 Whitehall Park Drive
Charlotte, NC 28273
+1 866-693-3105
sales@teguar.com

EUROPE
Teguar Europe AG
Churerstrasse 54, CH-8808
Pfäffikon, Switzerland
+41 41 561 53 11
sales.EU@teguar.com

ASIA
Teguar Taiwan Ltd.
Rm. A, 28F-12., No.99, Sec. 1, Xintai 5th Rd.,
Xizhi Dist., New Taipei City 221, Taiwan (R.O.C.)
+886 2 7751 5319
sales@teguar.com.tw