TEGUAR

TS-4810-19

19" Stainless Steel Panel PC



Key Highlights

- 19" Full-Flat Touchscreen
- IP66 / IP69K Rated
- Intel Celeron J6412 CPU with Windows 11 Capabilities
- Waterproof Connectors and Power Supply
- Fanless and Fully Sealed Design

VIEW ONLINE

The TS-4810-19 has a 19" resistive or Pcap touchscreen and a fully flush front bezel, meaning there are no crevices where debris and dirt can build up. This computer is IP66 / IP69K rated and is designed for food processing and repeated cleanings in washdown environments. Inside, the TS-4810-19 is made with industrial components and has an Intel Celeron J6412 CPU that is able to run Windows 11 Operating System. Multiple inputs and outputs are located on the back side of the unit and have M12 metal I/O connectors to ensure that no water gets in during powerful washdowns.

USA
Teguar
2920 Whitehall Park Drive
Charlotte, NC 28273
+1 866-693-3105
sales@teguar.com

EUROPE
Teguar Europe AG
Churerstrasse 54, CH-8808
Pfäffikon, Switzerland
+41 41 561 53 11
sales.EU@teguar.com

ASIA
Teguar Taiwan Ltd.
Rm. A, 28F-12., No.99, Sec. 1, Xintai 5th Rd.,
Xizhi Dist., New Taipei City 221, Taiwan (R.O.C.)
+886 2 7751 5319
sales@teguar.com.tw

Technical Specifications

Primary Components

Processor Family	Intel Celeron Elkhart Lake
Processor Model	Celeron J6412
Processor Speed	Up to 2.6 GHz
Memory Type	2x DDR4 SO-DIMM
Memory Support	4GB, 8GB, 16GB, 32GB
Storage Type	1x 2.5" SATA Drive Bay for SSD/HDD, 1x M.2 SATA3 2280 Slot
Storage Support	64GB-2TB

External I/O Ports

USB	2x M12 8Pin for USB 1/2 and USB 3/4
Serial / Com	2x M12 8-pin for COM
Serial Protocol Detail	2x RS-232/422/485 (configured in BIOS)
Ethernet / LAN	1x M12 8 pin RJ45 2.5Gbit LAN
Other Ports	M12 Ports can be configured as needed. Example: 2nd LAN or 3rd COM port
Power Input Port	M12 type 5-PIN DC-in

Expansion Slots

Internal M.2	1x M.2 2230 Key E (for WiFi expansion option), 1x M.2 3042/3052 Key B (For 4G/5G Cellular expansion option)

Thermal & Environmental

Operating Temperature	0°C - 50°C (32°F – 122°F)
Storage Temperature	-20°C - 60°C (-4°F – 140°F)
Cooling Solution	Passive – Fanless
Humidity Range	10% – 90% Non-condensing
Storage Humidity	10% – 90% Non-condensing

Peripherals & Wireless Connectivity

WiFi	Optional WiFi + Bluetooth Flat Antenna Kit, Supports WIFI 6 (AX)
Bluetooth	Optional Bluetooth 5.2
Barcode Scanner	Optional 1D/2D Barcode Scanner

Certification

Certifications	CE, FCC, VCCI Class B

Specifications subject to change.

Display

Screen Size	19"
Screen Resolution	1280 x 1024 (SXGA)
Screen Ratio	5:4
Brightness	350 nits

Touch Screen

Touch Screen	5 Wire Resistive, Projected Capacitive (Multi-touch)
Hardness	Resistive: 3H, P-cap: 7H

Power

Input Voltage Range	12-28V DC
Standard Power Adapter	AC 100~240V / 47 ~ 63Hz, IP68, 60W

Operating Systems

Windows	Windows 10 IoT, Windows 10 Pro, Windows 11 Pro
Linux	Linux Ubuntu 20.04 or above (Contact your sales rep for more information)

Compatibility

Security Hardware	fTPM 2.0

Multimedia

Speakers	Optional Speaker

Enclosure

Material	Optional SUS316 Stainless Steel, SUS304 Stainless Steel
IP Rating	IP66, IP69K, NEMA 4X, Optional IP67
Color	Stainless Steel
Control Buttons	Power Button
Mounting Options	Table Mount, VESA 100 Mount, Wall Mount

Weight / Dimensions

Weight	11.5 kg (25.4 lbs)
Dimensions	458 x 386 x 64 mm (18.0 x 15.2 x 2.5 in)

Warranty

Warranty	Up to 5 Years

USA
Teguar
2920 Whitehall Park Drive
Charlotte, NC 28273
+1 866-693-3105
sales@teguar.com

EUROPE
Teguar Europe AG
Churerstrasse 54, CH-8808
Pfäffikon, Switzerland
+41 41 561 53 11
sales.EU@teguar.com

ASIA
Teguar Taiwan Ltd.
Rm. A, 28F-12., No.99, Sec. 1, Xintai 5th Rd.,
Xizhi Dist., New Taipei City 221, Taiwan (R.O.C.)
+886 2 7751 5319
sales@teguar.com.tw

I/O Diagram Images

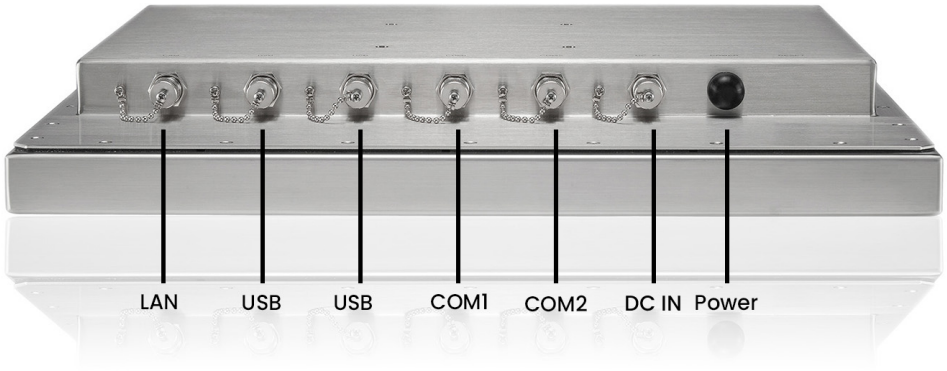

USA
Teguar
2920 Whitehall Park Drive
Charlotte, NC 28273
+1 866-693-3105
sales@teguar.com

EUROPE
Teguar Europe AG
Churerstrasse 54, CH-8808
Pfäffikon, Switzerland
+41 41 561 53 11
sales.EU@teguar.com

ASIA
Teguar Taiwan Ltd.
Rm. A, 28F-12., No.99, Sec. 1, Xintai 5th Rd.,
Xizhi Dist., New Taipei City 221, Taiwan (R.O.C.)
+886 2 7751 5319
sales@teguar.com.tw

Tech Diagram Images

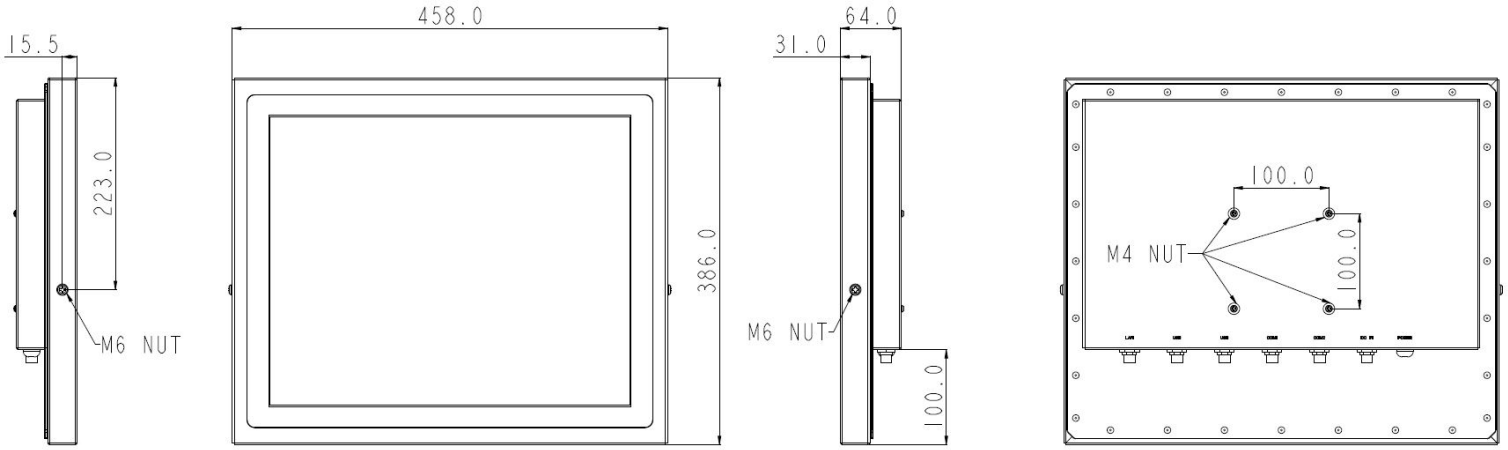

USA
Teguar
2920 Whitehall Park Drive
Charlotte, NC 28273
+1 866-693-3105
sales@teguar.com

EUROPE
Teguar Europe AG
Churerstrasse 54, CH-8808
Pfäffikon, Switzerland
+41 41 561 53 11
sales.EU@teguar.com

ASIA
Teguar Taiwan Ltd.
Rm. A, 28F-12., No.99, Sec. 1, Xintai 5th Rd.,
Xizhi Dist., New Taipei City 221, Taiwan (R.O.C.)
+886 2 7751 5319
sales@teguar.com.tw