TEGUAR

TS-5945-22

21.5" Stainless Steel Computer



Key Highlights

- 21.5" Touchscreen Display
- Intel 11th Generation Tiger Lake Core i3/i5 CPU
- Fanless Cooling System
- Windows 11 Compatible
- Multiple I/Os including 2x USB 2.0, 1x LAN, and 1x COM
- IP66/IP69K Waterproof Rated

VIEW ONLINE

The TS-5945-22 Stainless Steel Computer is ideal for industrial environments where water, dust, or harsh chemicals are present. The unit is made with SUS304 stainless steel, complete with hygienic bolts sealed with rubber NBR rings to keep moisture out. Equipped with multiple I/Os, M12 waterproof connectors allow for the use of inputs and outputs while in these wet environments. This 22" Stainless Steel Computer even comes with two optional blank M12 connectors for additional I/Os of your choice. Located inside the units is a powerful Intel® 11th Generation Tiger Lake CPU that allows the computer to be able to run Windows 11 operating system smoothly.

USA
Teguar
2920 Whitehall Park Drive
Charlotte, NC 28273
+1 866-693-3105
sales@teguar.com

EUROPE
Teguar Europe AG
Churerstrasse 54, CH-8808
Pfäffikon, Switzerland
+41 41 561 53 11
sales.EU@teguar.com

ASIA
Teguar Taiwan Ltd.
Rm. A, 28F-12., No.99, Sec. 1, Xintai 5th Rd.,
Xizhi Dist., New Taipei City 221, Taiwan (R.O.C.)
+886 2 7751 5319
sales@teguar.com.tw

Technical Specifications

Primary Components

Processor Family	Intel Core I series 11th Generation Tiger Lake
Processor Model	Standard Core i3-1115G4E, optional upgrade to i5-1145G7E
Processor Speed	Up to 4.1 GHz
Memory Type	2x DDR4 SO-DIMM
Memory Support	4GB, 8GB, 16GB, 32GB, 64GB
Storage Type	1x M.2 2280 SSD slot, SATA3 or NVME
Storage Support	128GB-1TB

Power

Input Voltage Range	9-36V DC
Max Power Consumption	36W
Standard Power Adapter	Optional IP67, AC 90-305V Input, 96W OR Non-IP65, AC 90-305V Input, 90W

Operating Systems

Windows	Windows 10 IoT, Windows 10 Pro, Windows 11 Pro

Compatibility

Security Hardware	TPM 2.0

Thermal & Environmental

Operating Temperature	0°C - 50°C (32°F – 122°F (i3/i5))
Storage Temperature	-30°C - 70°C (-22°F – 158°F)
Cooling Solution	Passive – Fanless
Humidity Range	10% – 90% Non-condensing
Storage Humidity	10% – 90% Non-condensing

Peripherals & Wireless Connectivity

WiFi	Optional WiFi + Bluetooth, Flat Antenna, Supports WIFI 6 (AX)
Bluetooth	Bluetooth 5.2
Sim Card	1x Nano SIM Card Slot
RFID	Optional RFID module on front side, project only

Warranty

Warranty	Up to 5 Years

Specifications subject to change.

Display

Screen Size	21.5"
Screen Resolution	1920 x 1080 (Full HD)
Screen Ratio	16:9
Brightness	250 nits, Optional 1000 nit High Brightness

Touch Screen

Touch Screen	Projected Capacitive (Multi-touch)

External I/O Ports

USB	1x M12 8Pin for USB 1/2
Serial / Com	1x M12 8-pin for COM
Serial Protocol Detail	1x RS-232/422/485 (configured in BIOS), RS-232 default
Ethernet / LAN	1x M12 8pin RJ45 Gbe LAN
Other Ports	2x blank M12s are reserved for optional IO expansion
Power Input Port	M12 type 3-PIN DC-in

Expansion Slots

Internal M.2	1x M.2 2230 Key E (for WiFi expansion option)

Enclosure

Material	SUS304 Stainless Steel
IP Rating	IP66, IP69K
Color	Stainless Steel
Control Buttons	Power Switch
Mounting Options	Floor Stand, Swing Arm, VESA 100 Mount

Weight / Dimensions

Weight	7.9 kg (17.4 lbs)
Dimensions	540.4 x 332.4 x 61.9 mm (21.3 x 13.1 x 2.4 in)

Certification

Certifications	CE, FCC

USA
Teguar
2920 Whitehall Park Drive
Charlotte, NC 28273
+1 866-693-3105
sales@teguar.com

EUROPE
Teguar Europe AG
Churerstrasse 54, CH-8808
Pfäffikon, Switzerland
+41 41 561 53 11
sales.EU@teguar.com

ASIA
Teguar Taiwan Ltd.
Rm. A, 28F-12., No.99, Sec. 1, Xintai 5th Rd.,
Xizhi Dist., New Taipei City 221, Taiwan (R.O.C.)
+886 2 7751 5319
sales@teguar.com.tw

I/O Diagram Images

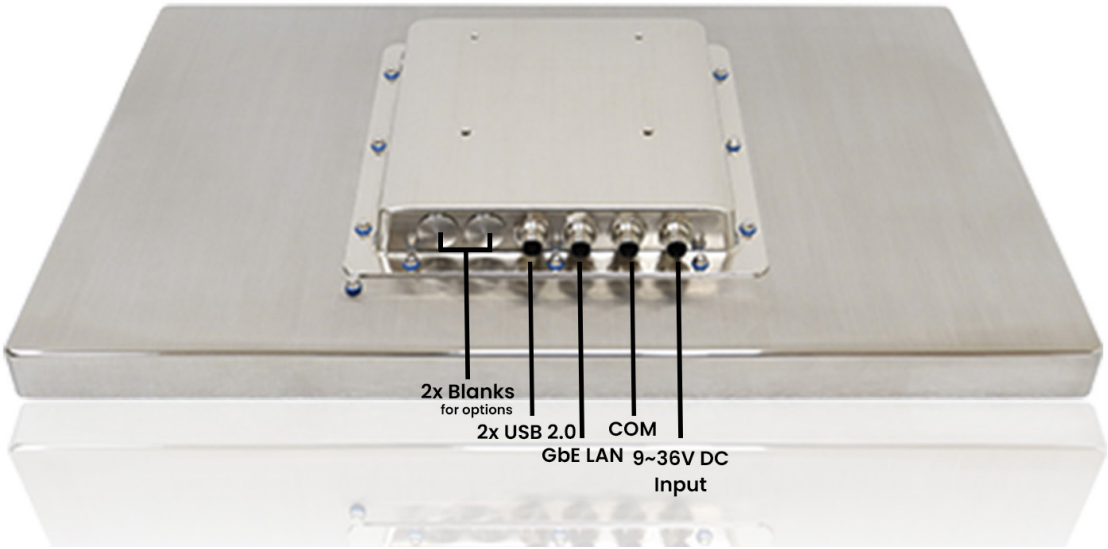

USA
Teguar
2920 Whitehall Park Drive
Charlotte, NC 28273
+1 866-693-3105
sales@teguar.com

EUROPE
Teguar Europe AG
Churerstrasse 54, CH-8808
Pfäffikon, Switzerland
+41 41 561 53 11
sales.EU@teguar.com

ASIA
Teguar Taiwan Ltd.
Rm. A, 28F-12., No.99, Sec. 1, Xintai 5th Rd.,
Xizhi Dist., New Taipei City 221, Taiwan (R.O.C.)
+886 2 7751 5319
sales@teguar.com.tw

Tech Diagram Images

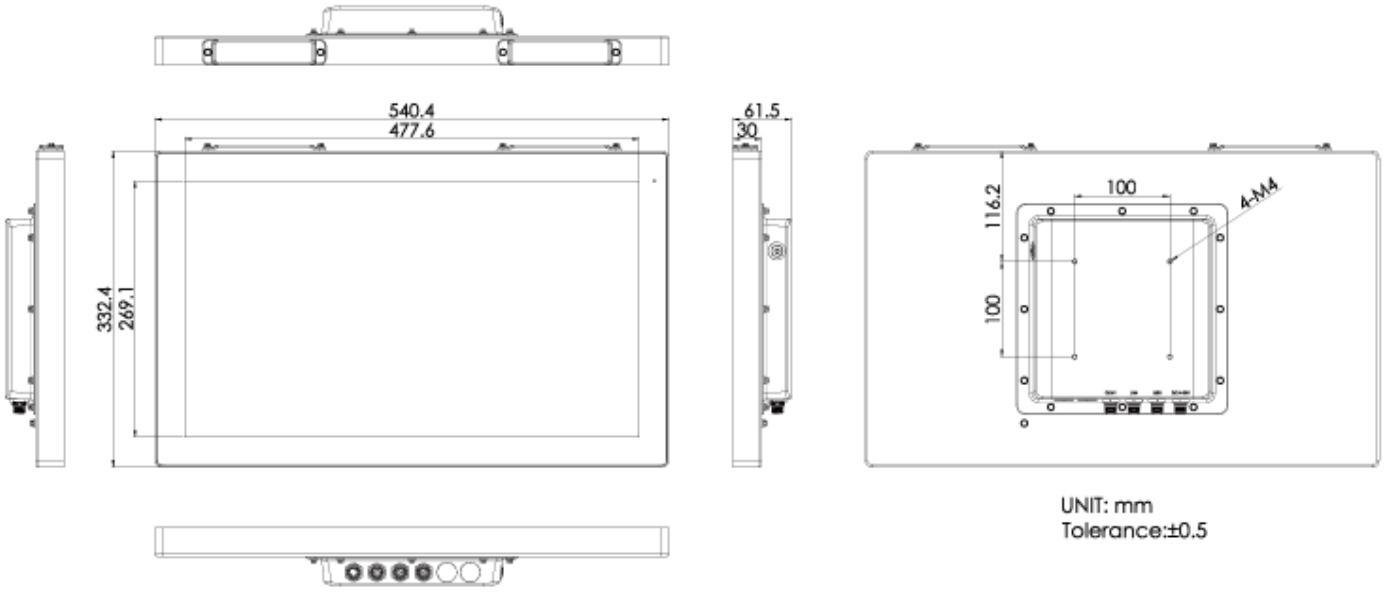

USA
Teguar
2920 Whitehall Park Drive
Charlotte, NC 28273
+1 866-693-3105
sales@teguar.com

EUROPE
Teguar Europe AG
Churerstrasse 54, CH-8808
Pfäffikon, Switzerland
+41 41 561 53 11
sales.EU@teguar.com

ASIA
Teguar Taiwan Ltd.
Rm. A, 28F-12., No.99, Sec. 1, Xintai 5th Rd.,
Xizhi Dist., New Taipei City 221, Taiwan (R.O.C.)
+886 2 7751 5319
sales@teguar.com.tw