TEGUAR

TSP-4845-07

7" Stainless Panel PC



Key Highlights

- 7" Resistive or PCAP Touchscreen
- Intel Celeron J6412 Processor
- Windows 11 Operating System
- IP66/IP69K Stainless Steel Front Bezel
- Aluminum Back Enclosure

VIEW ONLINE

The 7" Stainless Panel PC is a compact and efficient computing solution for various industrial applications. Featuring Windows 11 compatibility and Celeron J6412 CPU, it offers a seamless user experience. It replaces the TSP-2945-07, providing upgraded performance and features. The IP66/IP69K compliant front bezel ensures protection against water and harsh chemicals, making it suitable for food & beverage and pharmaceutical industries. With an aluminum back enclosure, it remains lightweight while granting easy access to inputs/outputs. Optionally, it comes with a smart battery for uninterrupted operation, making it a versatile and valuable addition to your industrial setup.

USA
Teguar
2920 Whitehall Park Drive
Charlotte, NC 28273
+1 866-693-3105
sales@teguar.com

EUROPE
Teguar Europe AG
Churerstrasse 54, CH-8808
Pfäffikon, Switzerland
+41 41 561 53 11
sales.EU@teguar.com

ASIA
Teguar Taiwan Ltd.
Rm. A, 28F-12., No.99, Sec. 1, Xintai 5th Rd.,
Xizhi Dist., New Taipei City 221, Taiwan (R.O.C.)
+886 2 7751 5319
sales@teguar.com.tw

Technical Specifications

Primary Components

Processor Family	Intel Celeron Elkhart Lake
Processor Model	Celeron J6412 Quad
Processor Speed	2.0 GHz
Memory Type	1x DDR4 SO-DIMM
Memory Support	4GB, 8GB, 16GB, 32GB
Storage Type	1x M.2 M Key, PCIe or SATA, 2242 default or 2280
Storage Support	128GB-1TB

Power

Input Voltage Range	9-36V DC
Standard Power Adapter	Optional 12V 5A AC/DC Adapter

Operating Systems

Windows	Windows 10 IoT, Windows 10 Pro, Windows 11 IoT, Windows 11 Pro

Expansion Slots

Internal M.2	1x M.2 2230 Key E (for WiFi expansion option)

Thermal & Environmental

Operating Temperature	0°C - 50°C (32°F – 122°F), -20°C - 60°C (Optional -4°F – 140°F)
Storage Temperature	-30°C - 70°C (-22°F – 158°F)
Cooling Solution	Passive – Fanless
Humidity Range	10% – 95% Non-condensing
Storage Humidity	10% – 90% Non-condensing

Weight / Dimensions

Weight	1.6 kg (3.5 lbs)
Dimensions	217 x 163 x 40 mm (8.5 x 6.4 x 1.6 in)

Warranty

Warranty	Up to 5 Years

Specifications subject to change.

Display

Screen Size	7"
Screen Resolution	800 x 480 (WVGA)
Screen Ratio	5:3
Brightness	300 nits, Optional 1000 nit High Brightness

Touch Screen

Touch Screen	Projected Capacitive, Resistive

External I/O Ports

USB	2x USB 2.0, 2x USB 3.2
Serial / Com	1x COM
Serial Protocol Detail	1x RS-232/422/485 DB-9, default RS-232(COM1)
Ethernet / LAN	2x RJ45 2.5 GbE LAN
Video Outputs	1x DisplayPort
Audio Ports	1x Audio Line-Out
Power Input Port	DC-in Jack (Phoenix Type)

Enclosure

Material	Aluminum, Optional SUS316 Stainless Steel, SUS304 Stainless Steel
IP Rating	IP66 Front Bezel, IP69K Front Bezel
Color	Silver, Stainless Steel
Mounting Options	Panel Mount, VESA 75 Mount

Peripherals & Wireless Connectivity

WiFi	Optional 802.11 ac + Bluetooth with External Antennas
Bluetooth	Optional Bluetooth 4.0

Certification

Certifications	CE, EN 1672-2 Complaint (PCAP Touchscreen Only), FCC Class A

USA
Teguar
2920 Whitehall Park Drive
Charlotte, NC 28273
+1 866-693-3105
sales@teguar.com

EUROPE
Teguar Europe AG
Churerstrasse 54, CH-8808
Pfäffikon, Switzerland
+41 41 561 53 11
sales.EU@teguar.com

ASIA
Teguar Taiwan Ltd.
Rm. A, 28F-12., No.99, Sec. 1, Xintai 5th Rd.,
Xizhi Dist., New Taipei City 221, Taiwan (R.O.C.)
+886 2 7751 5319
sales@teguar.com.tw

I/O Diagram Images

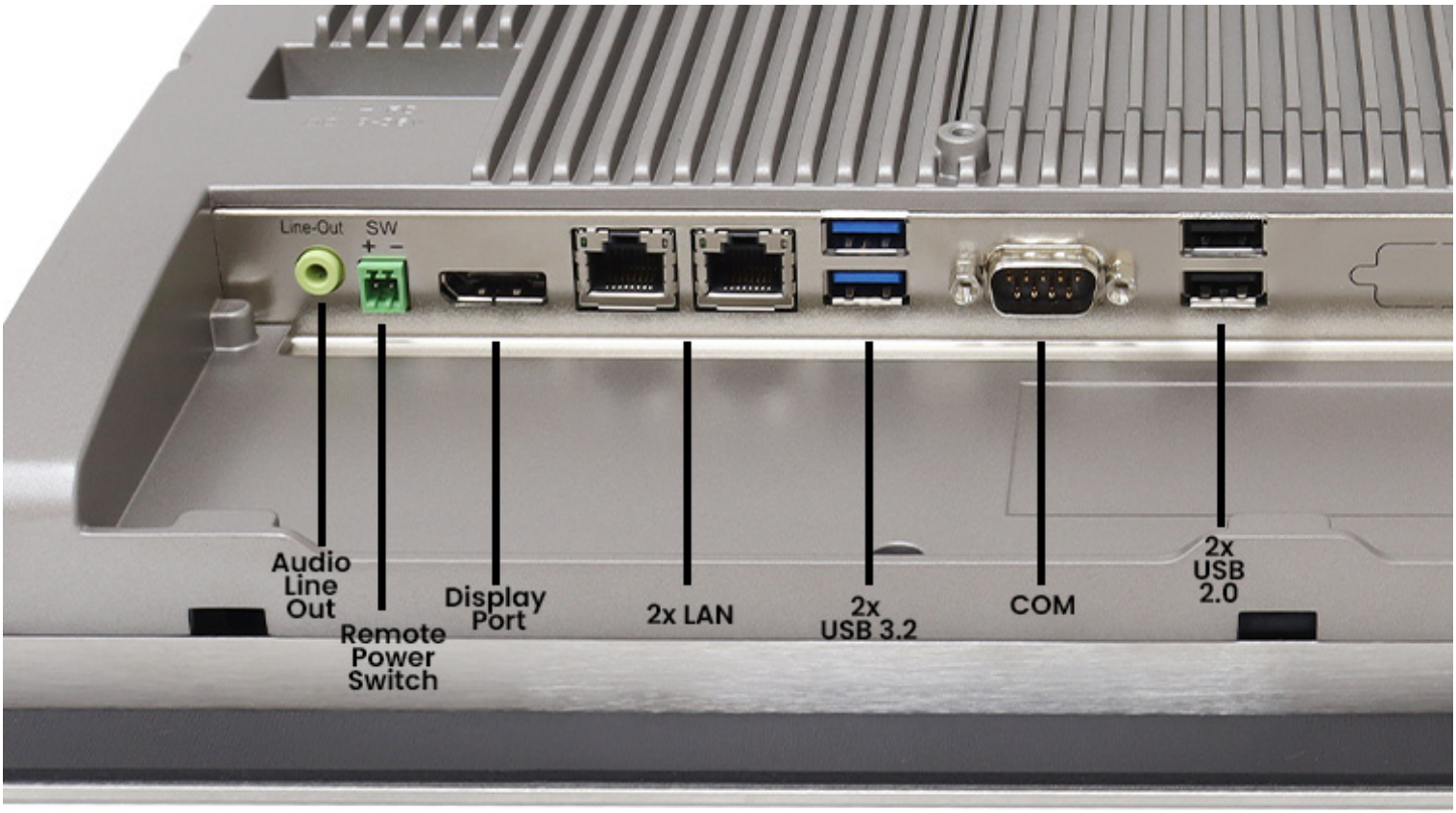

USA
Teguar
2920 Whitehall Park Drive
Charlotte, NC 28273
+1 866-693-3105
sales@teguar.com

EUROPE
Teguar Europe AG
Churerstrasse 54, CH-8808
Pfäffikon, Switzerland
+41 41 561 53 11
sales.EU@teguar.com

ASIA
Teguar Taiwan Ltd.
Rm. A, 28F-12., No.99, Sec. 1, Xintai 5th Rd.,
Xizhi Dist., New Taipei City 221, Taiwan (R.O.C.)
+886 2 7751 5319
sales@teguar.com.tw

Tech Diagram Images

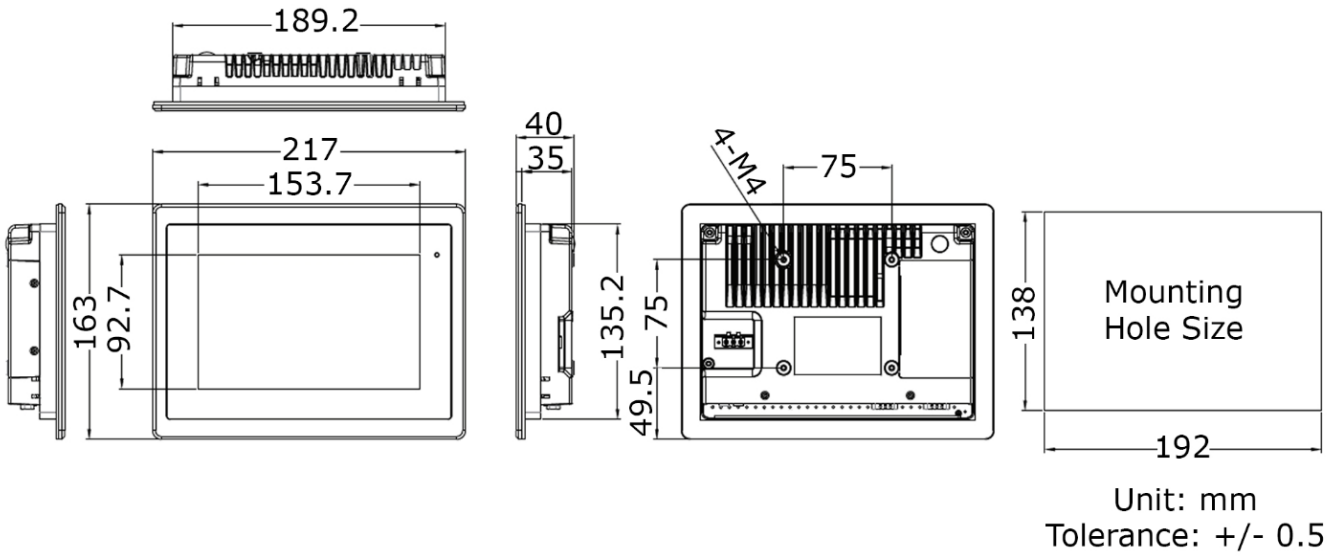

USA
Teguar
2920 Whitehall Park Drive
Charlotte, NC 28273
+1 866-693-3105
sales@teguar.com

EUROPE
Teguar Europe AG
Churerstrasse 54, CH-8808
Pfäffikon, Switzerland
+41 41 561 53 11
sales.EU@teguar.com

ASIA
Teguar Taiwan Ltd.
Rm. A, 28F-12., No.99, Sec. 1, Xintai 5th Rd.,
Xizhi Dist., New Taipei City 221, Taiwan (R.O.C.)
+886 2 7751 5319
sales@teguar.com.tw