TEGUAR

-BAY BATTERY CHARGER FOR TME-7115 SERIE



Key Highlights

- Built in 300W Power Supply
- Six 202 group, 7800 mah batteries
- 3~3.5 hrs from 0% to 100%
- AT / Advanced Technology Power Switch
- US AC Power Cord

VIEW ONLINE

6-Bay Battery Charger for TME-7115 Series, including the TME-7115-22 and TME-7115-24. Holds and charges up to 6 batteries at once. The batteries slot into the sides, leaving the top flat, so you can easily stack multiple chargers on top of one another.

USA
Teguar
2920 Whitehall Park Drive
Charlotte, NC 28273
+1 866-693-3105
sales@teguar.com

EUROPE
Teguar Europe AG
Churerstrasse 54, CH-8808
Pfäffikon, Switzerland
+41 41 561 53 11
sales.EU@teguar.com

ASIA
Teguar Taiwan Ltd.
Rm. A, 28F-12., No.99, Sec. 1, Xintai 5th Rd.,
Xizhi Dist., New Taipei City 221, Taiwan (R.O.C.)
+886 2 7751 5319
sales@teguar.com.tw

Technical Specifications

Power

Input Voltage Range	85-264V AC
Max Power Consumption	37.8W, 230.09W (Max Load on 230V AC), 239.88 W (Max Load on 110V AC)
Standard Power Adapter	C13 US AC Type B Power Cord, 300W Power Supply is built-into the Chassis

Enclosure

Material	Metal Housing
Color	White
Led Indicator Light	Battery, Power

Thermal & Environmental

Operating Temperature	0°C - 40°C (32°F – 104°F)
Storage Temperature	-20°C - 60°C (-4°F – 140°F)
Cooling Solution	Active – with Fan
Humidity Range	20% – 90% Non-condensing
Storage Humidity	10%~95%, non-condensing

Weight / Dimensions

Weight	0.8 kg (1.8 lbs)
Dimensions	273.8 x 122 x 301.8 mm (10.8 x 4.8 x 11.9 in)

Specifications subject to change.

USA
Teguar
2920 Whitehall Park Drive
Charlotte, NC 28273
+1 866-693-3105
sales@teguar.com

EUROPE
Teguar Europe AG
Churerstrasse 54, CH-8808
Pfäffikon, Switzerland
+41 41 561 53 11
sales.EU@teguar.com

ASIA
Teguar Taiwan Ltd.
Rm. A, 28F-12., No.99, Sec. 1, Xintai 5th Rd.,
Xizhi Dist., New Taipei City 221, Taiwan (R.O.C.)
+886 2 7751 5319
sales@teguar.com.tw

I/O Diagram Images

Front Panel

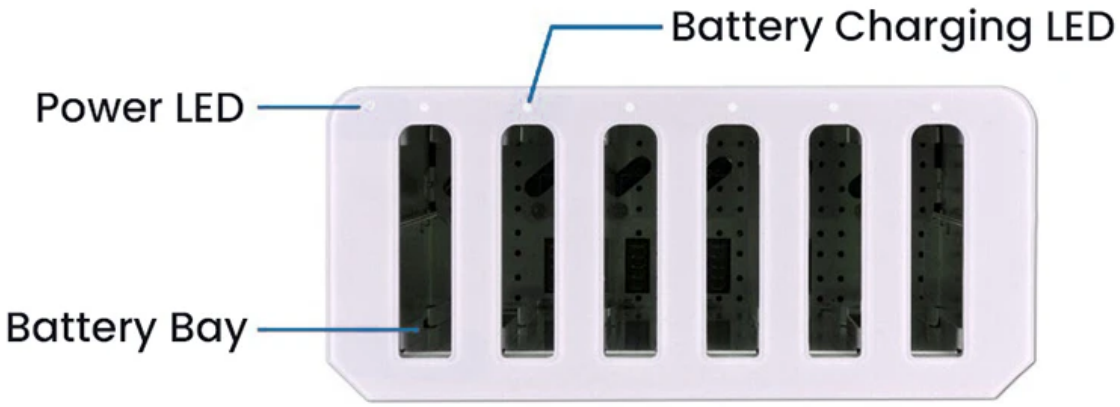

Rear Panel

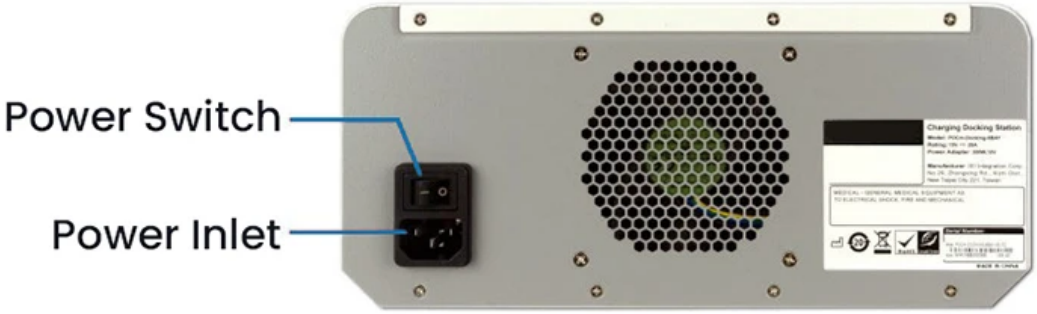

USA
Teguar
2920 Whitehall Park Drive
Charlotte, NC 28273
+1 866-693-3105
sales@teguar.com

EUROPE
Teguar Europe AG
Churerstrasse 54, CH-8808
Pfäffikon, Switzerland
+41 41 561 53 11
sales.EU@teguar.com

ASIA
Teguar Taiwan Ltd.
Rm. A, 28F-12., No.99, Sec. 1, Xintai 5th Rd.,
Xizhi Dist., New Taipei City 221, Taiwan (R.O.C.)
+886 2 7751 5319
sales@teguar.com.tw

Tech Diagram Images

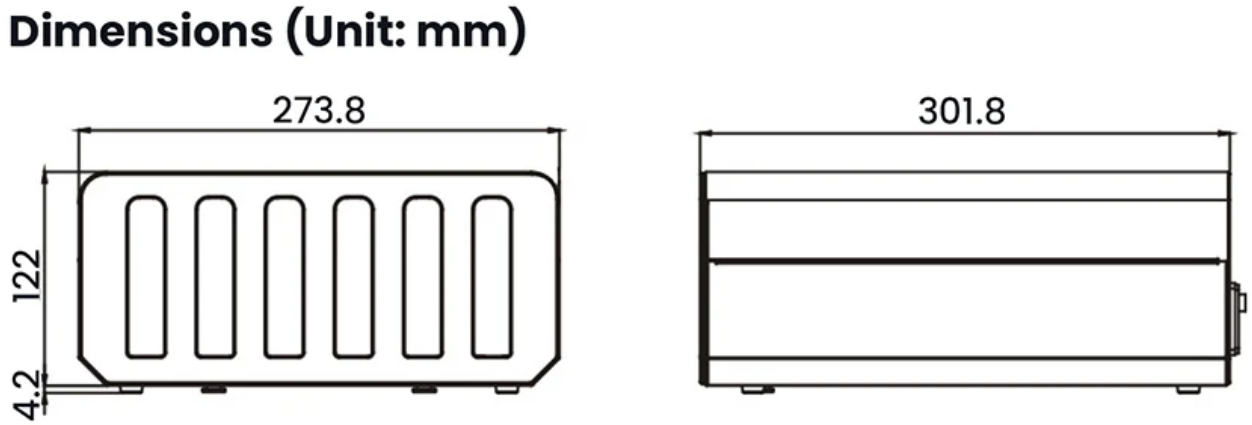

USA
Teguar
2920 Whitehall Park Drive
Charlotte, NC 28273
+1 866-693-3105
sales@teguar.com

EUROPE
Teguar Europe AG
Churerstrasse 54, CH-8808
Pfäffikon, Switzerland
+41 41 561 53 11
sales.EU@teguar.com

ASIA
Teguar Taiwan Ltd.
Rm. A, 28F-12., No.99, Sec. 1, Xintai 5th Rd.,
Xizhi Dist., New Taipei City 221, Taiwan (R.O.C.)
+886 2 7751 5319
sales@teguar.com.tw