Features

- 21.5" True Flat IP65 Protected Touchscreen
- Intel Skylake Celeron/Core i5 CPU
- Isolated RS232, LAN and USB Available
- Optional Multi-Function Device Box
- TPM 2.0, Intel vPro Supported*

Technical Specifications

General

Main Category	Industrial Computer

Primary Components

Processor Family	Intel Celeron or Core I 6th Generation Skylake
Processor Model	Celeron 3955U; Core- i5-6300U
Processor Speed	Base 2.0 GHz
Memory Type	2x DDR4 SO-DIMM
Memory Support	4GB, 8GB, 16GB, 32GB
Storage type	1x 2.5" SATA Drive Bay for SSD/HDD (easily accessible)
Storage support	32GB-1TB

Display

Screen Size	21.5"
Resolution	1920 x 1080 (Full HD)
Screen Ratio	16:9
Brightness	250 nits

Touch Screen

Touch Screen	Projected Capacitive

Expansion Slots

Internal Mini PCIe	1x Mini-PCIe (half size)
Internal M.2	1x M.2 Slot half-size Type E

Multimedia

Speakers	2x 2W Speakers
Camera	2MP Webcam

Thermal and Environmental

Operating Temperature	Array (32°F – 104°F)
Storage Temperature	Array (-4°F – 140°F)
Humidity Range	20% – 85% Non-condensing
Cooling Solution	Passive – Fanless

Enclosure

Material	Aluminum
Ip Rating	IP65 Front Bezel
Color	Black
Antibacterial Housing	Yes
Mounting Options	VESA 75 Mount

External I/O ports

USB	4x USB 3.0
Serial / Com	2x COM
Serial Protocol Detail	RJ-48 style plug with adapters for DB-9, support RS-232
Ethernet / LAN	2x RJ45 GbE LAN
Video Outputs	1x HDMI
Other Ports	Optional Isolated I/O: RS-232, RJ45 LAN, USB
Audio	1x Audio Line-Out, 1x Mic-In

Peripherals & Wireless Connectivity

Power

Input Voltage Range	12-48V DC
Standard Power Adapter	65W/19V AC/DC Adapter

Dimensions / Weight

Weight	8 KG (17.6 lbs)
Dimensions	536 x 48 x 328 mm (21.1 x 1.9 x 12.9 in)

Battery

Certification

Certifications	60601-1 4th Edition

Operating Systems

Windows	Windows 10 IoT, Windows 10 Pro
Linux	Linux (Contact your sales rep for more information)

Warranty

Warranty	Up to 5 Years

Compatibility

Security Hardware	TPM 2.0, Intel vPro *Not available with Celeron

Filters

Main Category Filter	Industrial Computer

Inputs / Outputs

Technical Drawings

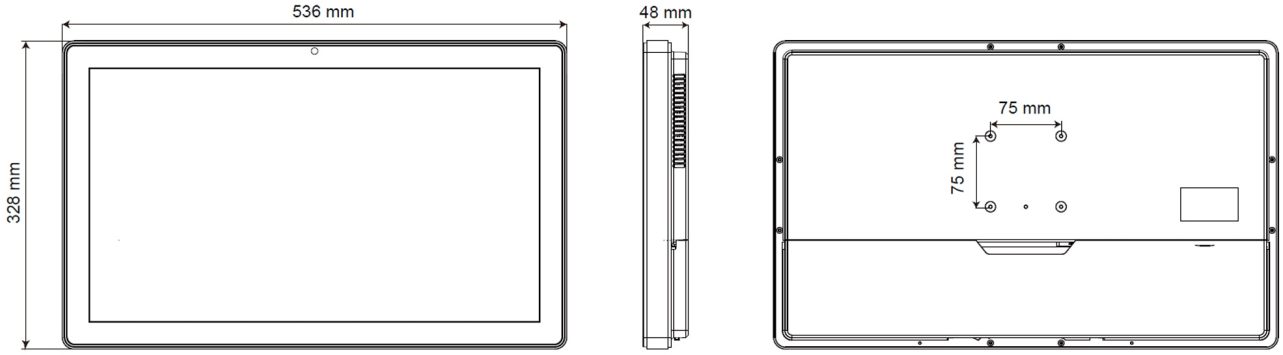

All specifications are subject to change without notice.